YAMAHA

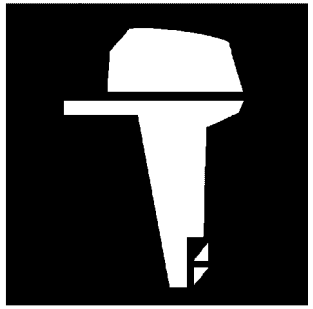

PARTS CATALOGUE
CATALOGO DE REPUESTOS

F200BET'25 (6S1M)
FL200BET'25 (6S2M)

YAMAHA
GENUINE
Parts & Accessories

1Z6S1-200SA

( )

F200BET/FL200BET
PARTS CATALOGUE
©2025 by Yamaha Motor Co., Ltd.
1st edition, October 2025
All rights reserved.
Any reprinting or unauthorized use
without the written permission of
Yamaha Motor Co., Ltd.
is expressly prohibited.
Printed in Japan.

F200BET/FL200BET
CATALOGO DE REPUESTOS
©2025 por Yamaha Motor Co., Ltd.
1ª edición, octubre 2025
Todos los derechos reservados.
Toda reproducción o uso no autorizado
sin el consentimiento escrito de
Yamaha Motor Co., Ltd.
quedan expresamente prohibidos
Impreso en Japón.

FOREWORD

This Parts Catalogue is related to the parts for the model(s) on the cover page. When you are ordering replacement parts, please refer to this Parts Catalogue and quote both part numbers and part names correctly.

1. Modifications or additions which have been made after the issue of the Parts Catalogue will be announced in the Parts News.
   It is advisable that you make the necessary corrections to the Parts Catalogue according to the Parts News.

2. Abbreviations
   The following abbreviations are used in this Parts Catalogue.
   "UR" Use specified parts number.
   "UN" Use as many as needed.
   "AP" Alternate Parts
   "LM" Locally Made (Parts need to be ordered locally)
   "F#" Frame No. (Applicable machine No.)
   "O/S" Over Size

3. The number of components for assembly
   - Parts, which are to be supplied in an assembly, are listed with a dot (.) in front of the part name as shown below.
   - The numeral appearing to the right of each component part indicates the quantity of parts for each assembly unit.

PART NO.	DESCRIPTION	Q'TY	REMARKS
2F5–83310–60	FRONT FLASHER LIGHT ASSY	2	
115–83311–60	.BULB (6V–18W)	1	

4. Applicable colours of graphics are represented in the "REMARKS" as shown below.

PART NO.	DESCRIPTION	Q'TY	REMARKS
2N4–24110–00–X5	FUEL TANK COMP.	2	MXR
3J1–24240–10	.GRAPHIC, FUEL TANK	1	FOR MXR

5. Note that the illustrations for reference in finding parts numbers are not to be used for assembling. When assembling, please use the applicable service manual.

6. The asterisk (*) before a reference number indicates modified items after the first edition.

7. Applicable Serial No.
   Engine Serial No.

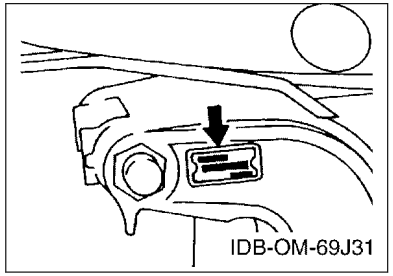

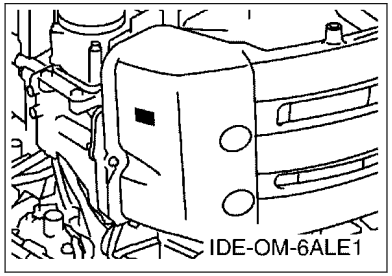

8. Applicable Engine Starting Serial No.

Model	Serial No.	Model	Serial No.
F200B	6S1-1017412	FL200B	6S2-1005738

9. Applicable Colour Code

Abbreviation	Colour Name	Colour Code
DBN1	DARK BLUISH GRAY 1	008D

10. Quantity Column Information

Column No.	Name Of Q'ty Column	Applicable Model
1	6S1M	F200BET
2	CAR	F200BET FOR CARIB
3	6S2M	FL200BET

PROLOGO

Este catálogo de repuestos corresponde a las piezas para el o los modelos que figuran en la página de portada. Al formular el pedido de repuestos, se ruega citar este catálogo y especificar correctamente el número y el nombre de las piezas.

1. Las modificaciones y agregados que se hayan realizado después de la edición de este Catálogo de Repuestos, serán anunciados en las Informaciones de Recambios.
   Es recomendable que se hagan las correcciones necesarias en el Catálogo de Repuestos de acuerdo con las Informaciones de Recambios.

2. Abreviaciones
   En este. Catálogo de Repuestos se emplean las siguientes abreviaciones.
   "UR" Usar el número de partes especificado
   "UN" Usar la cantidad necesaria
   "AP" Piezas sustitutivas
   "LM" Fabricación local (Hay que pedir los repuestos en las cercanías)
   "F#" Nº de bastidor (Nº aplicable a la máquina)
   "O/S" Sobredimensionado

3. La cantidad de componentes para el montaje
   - Los componentes, suministrados como conjunto, se describen con un punto (.) que precede al nombre del parte como se indica a continuación.
   - La numeración que aparece a la derecha de cada descripción indica la cantidad de partes por cada unidad de conjunto.

CODIGO Nº	DESCRIPCION	CANT.	OBSERVACIONES
2F5–83310–60	ENSAMBLAJE DE LA LUZ	2	
115–83311–60	.BOMBILLA (6V–18W)	1	

4. Los colores de los componentes se indican como sigue en la columna de "OBSERVACIONES".

CODIGO Nº	DESCRIPCION	CANT.	OBSERVACIONES
2N4–24110–00–X5	COMP. DEL TANQUE	2	MXR
3J1–24240–10	.GRAFICO, DEL TANQUE	1	PARA MXR

5. Debe tenerse en cuenta que las ilustraciones sirven como guia para la búsqueda de los números de partes y no deben usarse para el montaje. Durante el montaje, se recomienda usar el manual de taller correspondiente.

6. EL asterisco (*) antes del número de referencia indica los elementos modificados después de la primera edición.

7. Números de serie
   Nº de Serie del motor

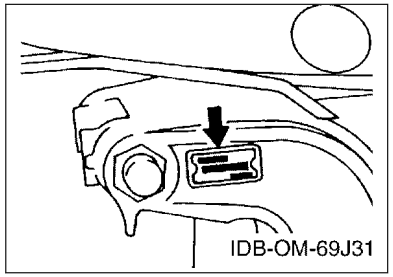

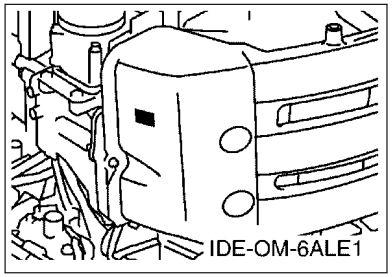

8. Números de serie del motor

Modelo	Nº de serie	Modelo	Nº de serie
F200B	6S1-1017412	FL200B	6S2-1005738

9. Códigos de color aplicables

Abreviatura	Nombre de color	Código de color
DBN1	DARK BLUISH GRAY 1	008D

10. Informacion para la columna de cantidades

Columna Nº	Nombre de la columna de cantidades	Modelo aplicable
1	6S1M	F200BET
2	CAR	F200BET FOR CARIB
3	6S2M	FL200BET

CONTENTS

SCHEDULED SERVICE PARTS....1
TOP COWLING....2
CYLINDER & CRANKCASE 1....3
CRANKSHAFT & PISTON....6
CYLINDER & CRANKCASE 2....7
CYLINDER & CRANKCASE 3....9
VALVE....10
INTAKE 1....13
INTAKE 2....15
THROTTLE BODY ASSY 1....17
THROTTLE BODY ASSY 2....18
THROTTLE BODY ASSY 3....19
FUEL INJECTION PUMP 1....20
FUEL INJECTION PUMP 2....22
FUEL 1....23
FUEL 2....24
GENERATOR....25
ELECTRICAL 1....26
ELECTRICAL 2....27
ELECTRICAL 3....28
ELECTRICAL 4....30
STARTING MOTOR....31
BOTTOM COWLING 1....33
BOTTOM COWLING 2....36
CONTROL....37
BRACKET 1....39
BRACKET 2....41
POWER TRIM & TILT ASSY 1....43
POWER TRIM & TILT ASSY 2....47
UPPER CASING....48
OIL PAN....51
LOWER CASING & DRIVE 1....52
LOWER CASING & DRIVE 2....56
LOWER CASING & DRIVE 3....59
LOWER CASING & DRIVE 4....63
STEERING GUIDE ATTACHMENT 1....66
STEERING GUIDE ATTACHMENT 2....67
REMOTE CONTROL BOX....68
REMOTE CONTROL ASSY 1....69
REMOTE CONTROL ASSY 2....72
REMOTE CONTROL ASSY 3....75
REMOTE CONTROL ASSY 4....78
METER 1....81
METER 2....82
SWITCH & PANEL 1....83
SWITCH & PANEL 2....84
OPTIONAL PARTS 1....85
OPTIONAL PARTS 2....86
OPTIONAL PARTS 3....87
OPTIONAL PARTS 4....88
OPTIONAL PARTS 5....89
OPTIONAL PARTS 6....90
OPTIONAL PARTS 7....91
OPTIONAL PARTS 8....92
OPTIONAL PARTS 9....93
OPTIONAL PARTS 10....94
OPTIONAL PARTS 11....95
OPTIONAL PARTS 12....96
REPAIR KIT 1....97
REPAIR KIT 2....98

INDEX

NUMERICAL INDEX....100

CONTENIDO

PARTES DE REPUESTO TEMPORALES..... 1
SOPORTE SUPERIOR..... 2
CILINDRO & CARTER 1..... 3
CIGUENAL & PISTON.....6
CILINDRO & CARTER 2..... 7
CILINDRO & CARTER 3..... 9
VALVULA.....10
ADMISION 1.....13
ADMISION 2.....15
CAJA DE ACELERADOR COMPL 1.....17
CAJA DE ACELERADOR COMPL 2.....18
CAJA DE ACELERADOR COMPL 3.....19
BOMBA DE INYECTOR 1.....20
BOMBA DE INYECTOR 2.....22
COMBUSTIBLE 1.....23
COMBUSTIBLE 2.....24
GENERADOR.....25
EQUIPO ELECTRICO 1..... 26
EQUIPO ELECTRICO 2..... 27
EQUIPO ELECTRICO 3..... 28
EQUIPO ELECTRICO 4..... 30
MOTOR DE ARRANQUE.....31
CUBIERTA INFERIOR 1..... 33
CUBIERTA INFERIOR 2..... 36
CONTROL..... 37
SOPORTE 1..... 39
SOPORTE 2..... 41
COMPONER Y PODER VARILLA 1.....43
COMPONER Y PODER VARILLA 2.....47
FUNDA SUPERIOR.....48
OIL PAN.....51
IMPULSOR E INFERIOR 1..... 52
IMPULSOR E INFERIOR 2..... 56
IMPULSOR E INFERIOR 3..... 59
IMPULSOR E INFERIOR 4..... 63
ADITAMENTO GUIA DE GOBIERNO 1.....66
ADITAMENTO GUIA DE GOBIERNO 2.....67
CONTROL REMOTO COMPLETO..... 68
CONTROL REMOTO COMPL 1.....69
CONTROL REMOTO COMPL 2.....72
CONTROL REMOTO COMPL 3.....75
CONTROL REMOTO COMPL 4.....78
MEDIDOR 1.....81
MEDIDOR 2.....82
PANEL DE INTERRUPTOR 1.....83
PANEL DE INTERRUPTOR 2.....84
PARTES OPCIONALES 1.....85
PARTES OPCIONALES 2.....86
PARTES OPCIONALES 3.....87
PARTES OPCIONALES 4.....88
PARTES OPCIONLES 5..... 89
PARTES OPCIONALES 6.....90
PARTES OPCIONALES 7.....91
PARTES OPCIONALES 8.....92
PARTES OPCIONALES 9.....93
PARTES OPCIONALES 10.....94
PARTES OPCIONALES 11.....95
PARTES OPCIONALES 12.....96
ESTUCHE REPARATION 1..... 97
ESTUCHE REPARATION 2..... 98

INDICE

INDICE NUMERICO.....100

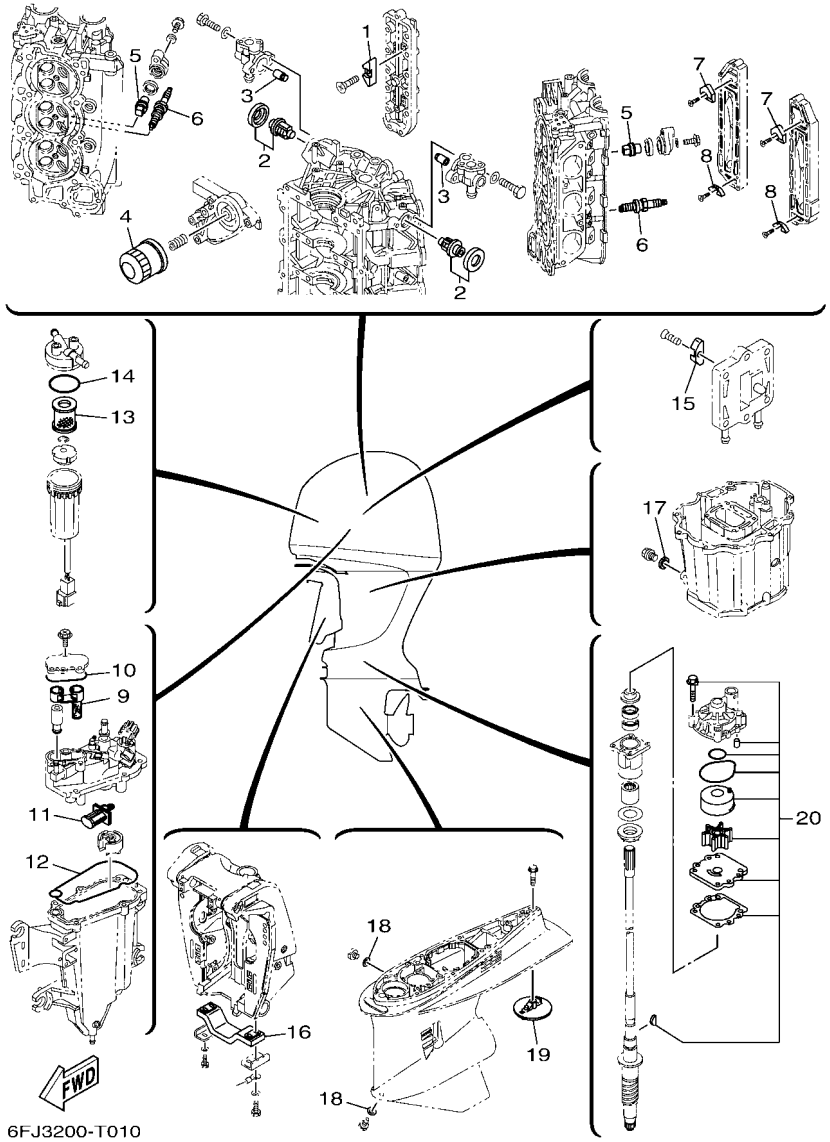

FIG. 1 SCHEDULED SERVICE PARTS — PARTES DE REPUESTO TEMPORALES

REF. NO.	PART NO. CODIGO Nº	DESCRIPTION DESCRIPCION	6S1M	CAR	6S2M			REMARKS OBSERVACIONES
1	6E5–11325–00	ANODE ANODO	4	4	4			
2	67F–12411–01	THERMOSTAT TERMOSTAT	2	2	2			
3	6P3–11325–00	ANODE ANODO	2	2	2			
4	69J–13440–05	ELEMENT ASSY, OIL CLEANER ELEMENTO FILTRO DE ACEITE	1	1	1			
5	6ML–11325–00	ANODE ANODO	4	4	4			
6	94702–00400	PLUG, SPARK (NGK LFR6A-11) BUJIA (NGK LFR6A-11)	6	6	6			
7	6P2–11325–00	ANODE ANODO	2	2	2			
8	6E5–11325–00	ANODE ANODO	2	2	2			
9	6CB–24501–01	FILTER, FUEL FIELTRO	1	1	1			
10	6CB–13016–00	O-RING ANILLO O	1	1	1			
11	63P–13915–00	FILTER FILTRO	1	1	1			
12	6CB–14984–00	GASKET, FLOAT CHAMBER EMPAQUE CAMARA DE BOIA	1	1	1			
13	6P3–24563–02	ELEMENT, FILTER ELEMENTO DEL FILTRO	1	1	1			
14	6P3–24564–00	GASKET EMPAQUE	1	1	1			
15	6E5–11325–00	ANODE ANODO	1	1	1			
16	6G5–45251–02	ANODE CATODE	1	1	1			
17	90430–14M09	GASKET JUNTA	1	1	1			
18	90430–08003	GASKET JUNTA	2	2	2			
19	6CE–45373–00	ANODE ANODO	1	1	1			
20	6S1–W0078–01	WATER PUMP REPAIR KIT ESTUCHE REPARACION BOMBA AGUA	1	1	1			

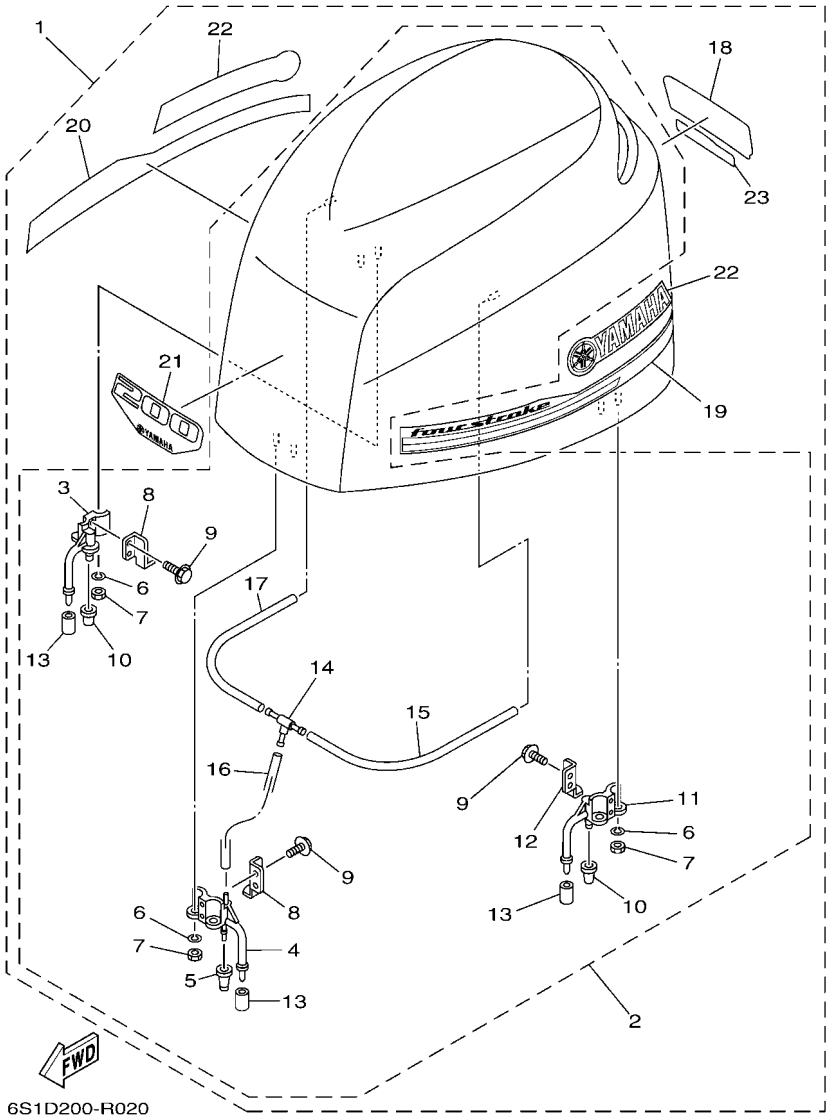

FIG. 2 TOP COWLING — SOPORTE SUPERIOR

REF. NO.	PART NO. CODIGO Nº	DESCRIPTION DESCRIPCION	6S1M	CAR	6S2M			REMARKS OBSERVACIONES
1	6S1–42610–12	TOP COWLING ASSY SOPORTE SUPERIOR COMPL.	1	1	1			
2	6P2–4261A–02	.TOP COWLING W/O GRAPHICS .SOPORTE SUPERIOR SIN GRAFICOS	1	1	1			
3	68F–42647–01	..HOLDER, CLAMP BAND ..MORDAZA DE ABRAZADERA	1	1	1			
4	69J–42647–01	..HOLDER, CLAMP BAND ..MORDAZA DE ABRAZADERA	1	1	1			
5	69J–42663–01	..DAMPER 2 ..AMORTIGUADOR 2	1	1	1			
6	92990–06100	..WASHER, SPRING ..ARANDELA PLANA	6	6	6			
7	95380–06600	..NUT, HEXAGON ..TUERCA	6	6	6			
8	60V–42651–01	..HOOK ..GANCHO	2	2	2			
9	97E95–06516	..BOLT, HEXAGON W/W DEEP RECESS ..TORNILLO HEXAGONAL CON RONDONA	6	6	6			
10	68F–42663–01	..DAMPER 2 ..AMORTIGUADOR 2	2	2	2			
11	68F–42648–01	..HOLDER, CLAMP BAND ..MORDAZA DE ABRAZADERA	1	1	1			
12	60V–42652–00	..HOOK ..GANCHO	1	1	1			
13	67F–13448–00	..CAP ..TAPA	3	3	3			
14	69J–24378–00	..PIPE, JOINT 3 ..TUBO DE UNION 3	1	1	1			
15	90445–11M27	..HOSE (L240) ..TUBO (L240)	1	1	1			
16	90445–11699	..HOSE (L500) ..TUBO (L500)	1	1	1			
17	90445–11182	..HOSE (L300) ..TUBO (L300)	1	1	1			
18	6S1–42678–01	.GRAPHIC, REAR .CALCAMONIA TRASERA	1	1	1			
19	6S1–42675–01	.GRAPHIC, SIDE 1 .CALCAMONIA LATERAL 1	1	1	1			
20	6S1–42676–01	.GRAPHIC, SIDE 2 .CALCAMONIA LATERAL 2	1	1	1			
21	6S1–42677–01	.GRAPHIC, FRONT .CALCAMONIA FRONTAL	1	1	1			
22	6S1–42681–01	.MARK, COWLING .MARCA DE CUBIERTA	2	2	2			
23	6S1–4267A–01	.GRAPHIC, REAR 2 .CALCAMONIA TRASERA 2	1	1	1			

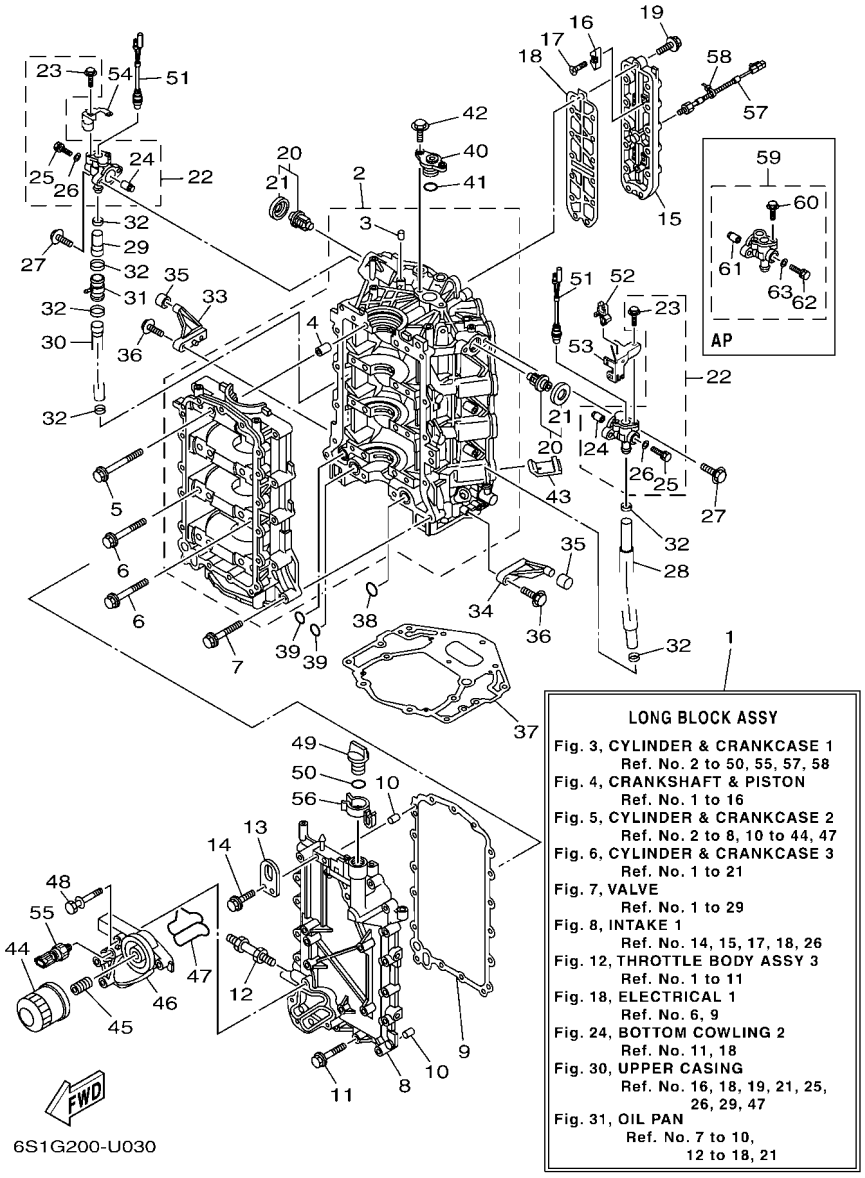

FIG. 3 CYLINDER & CRANKCASE 1 — CILINDRO & CARTER 1

REF. NO.	PART NO. CODIGO Nº	DESCRIPTION DESCRIPCION	6S1M	CAR	6S2M			REMARKS OBSERVACIONES
1	6DX–11000–06	LONG BLOCK ASSY SUBENSAMBLAJE DEL MOTOR	1	1	1			
2	6P2–15100–11	CRANKCASE ASSY CARTER COMPLETO	1	1	1			
3	93606–12019	.PIN, DOWEL .PASADOR DE CLAVIJA	1	1	1			
4	91814–18002	.PIN, DOWEL .PASADOR DE CLAVIJA	8	8	8			
5	6P2–15187–00	BOLT PERNO	8	8	8			
6	6P2–15481–00	BOLT 1 PERNO 1	8	8	8			
7	90119–08M66	BOLT, WITH WASHER TORNILLO CON ARANDELA	13	13	13			
8	6P2–15411–01–9S	COVER, CRANKCASE 1 CUBIERTA DE CARTER 1	1	1	1			
9	69J–15451–01	GASKET, CRANKCASE COVER 1 EMPAQ DE CUBIERTA DE CARTER	1	1	1			
10	93606–12019	PIN, DOWEL PASADOR DE CLAVIJA	2	2	2			
11	90119–08009	BOLT, WITH WASHER TORNILLO CON ARANDELA	17	17	17			
12	90116–10027	BOLT, STUD ESPARRAGO	1	1	1			
13	69J–11119–00	HANGER, ENGINE SOPORTE DEL MOTOR	1	1	1			
14	90105–06M09	BOLT, FLANGE TORNILLO	2	2	2			
15	6P2–1131C–00–9S	COVER, JOINT CUBIERTA DE UNION	1	1	1			
16	6E5–11325–00	ANODE ANODO	4	4	4			
17	98780–04016	SCREW, FLAT HEAD TORNILLO, CABEZA PLANA	4	4	4			
18	6P2–1131B–00	GASKET, COVER EMPAQUE DE CUBIERTA	1	1	1			
19	90119–06MA4	BOLT, WITH WASHER TORNILLO CON ARANDELA	13	13	13			
20	67F–12411–01	THERMOSTAT TERMOSTAT	2	2	2			
21	67F–12412–00	.SEAL, THERMOSTAT .SELLO TERMOSTATO	1	1	1			
22	6P2–1240H–00–9S	ANODE ASSY ANODO COMPLET	2	2	2			
23	90109–06M80	.BOLT .PERNO	2	2	2			
24	6P3–11325–00	.ANODE .ANODO	1	1	1			
25	90105–05012	.BOLT, FLANGE .TORNILLO	1	1	1			
26	90430–05002	.GASKET .JUNTA	1	1	1			
27	97E95–06525	BOLT, HEXAGON W/W DEEP RECESS TORNILLO HEXAGONAL CON RONDONA	4	4	4			

FIG. 3 CYLINDER & CRANKCASE 1 — CILINDRO & CARTER 1

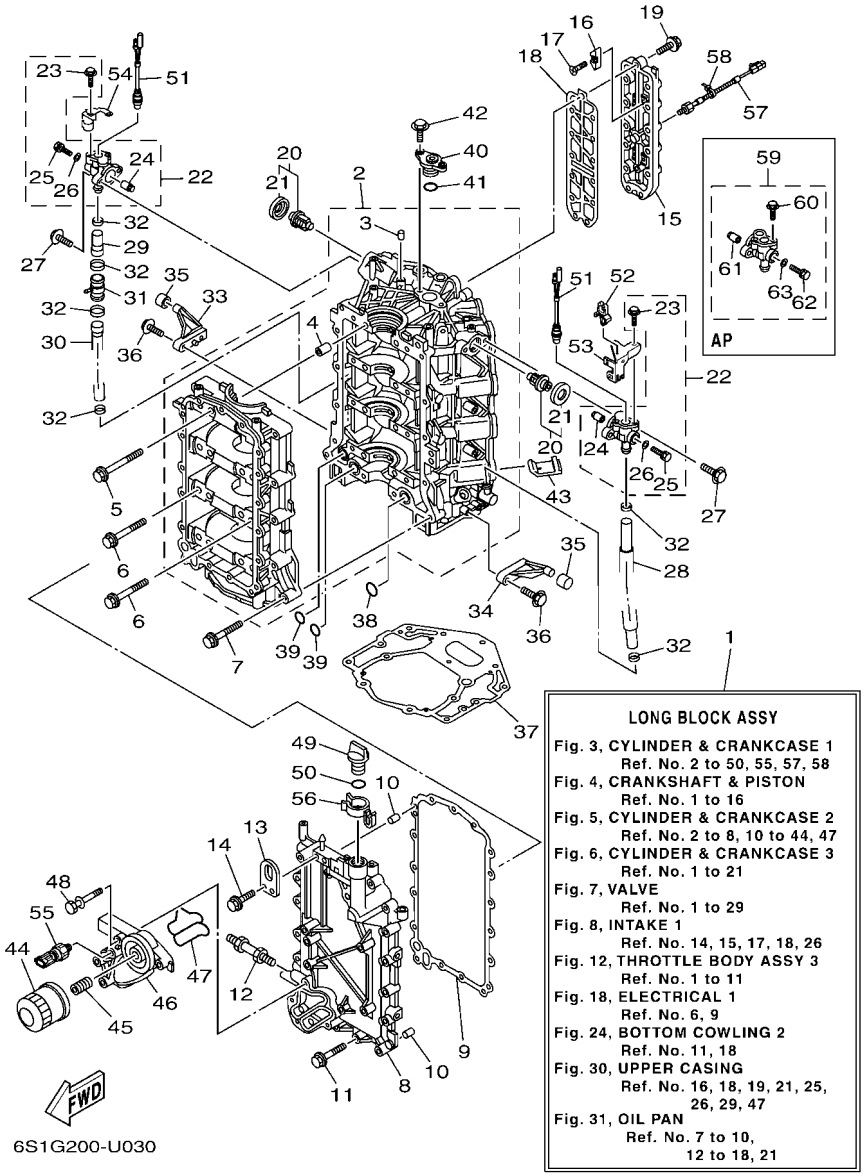

REF. NO.	PART NO. CODIGO Nº	DESCRIPTION DESCRIPCION	6S1M	CAR	6S2M			REMARKS OBSERVACIONES
28	6P2–1243A–00	HOSE 1 TUBO 1	1	1	1			
29	6P2–1243E–00	HOSE 2 TUBO 2	1	1	1			
30	6P2–1243F–00	HOSE,3 MANGUERA 3	1	1	1			
31	6S1–24378–00	PIPE, JOINT 3 TUBO DE UNION 3	1	1	1			
32	90465–11M59	CLAMP BRIDA	6	6	6			
33	67F–42761–01	STOPPER RETEN 1	1	1	1			
34	6P2–42761–00	STOPPER RETEN 1	1	1	1			
35	68F–44533–02	DAMPER, UPPER MOUNT RUBBER AMORTIGUADOR SUPERIOR	2	2	2			
36	97E95–06525	BOLT, HEXAGON W/W DEEP RECESS TORNILLO HEXAGONAL CON RONDONA	4	4	4			
37	69J–11351–12	GASKET, CYLINDER JUNTA, DE CILINDRO	1	1	1			
38	93210–25552	O-RING ANILLO O	1	1	1			
39	93210–19MJ1	O-RING ANILLO O	2	2	2			
40	69J–11313–00	PLUG, BLIND TAPON CIEGO	1	1	1			
41	93210–25647	O-RING ANILLO O	1	1	1			
42	97E95–06520	BOLT, HEXAGON W/W DEEP RECESS TORNILLO HEXAGONAL CON RONDONA	2	2	2			
43	69J–14664–01	GROMMET, WATER SHUT TAPON	2	2	2			
44	69J–13440–05	ELEMENT ASSY, OIL CLEANER ELEMENTO FILTRO DE ACEITE	1	1	1			
45	6S5–12858–00	BOLT, UNION PERNO DE UNION	1	1	1			
46	6P2–13446–00–9S	CONNECTOR CONECTOR	1	1	1			
47	6P2–13477–00	GASKET EMPAQUE	1	1	1			
48	90119–06025	BOLT, WITH WASHER TORNILLO CON ARANDELA	5	5	5			
49	6G8–15363–00	PLUG, OIL TAPON DE ACEITE	1	1	1			
50	93210–24M79	O-RING ANILLO O	1	1	1			
51	6P2–82560–01	THERMO SWITCH ASSY INTER. DE TERMO	2	2	2			
52	90464–06001	CLAMP BRIDA	1	1	1			
53	6P2–82588–01	PLATE PLACA	1	1	1			
54	6P2–82389–10	PLATE 2 PLACA 2	1	1	1			

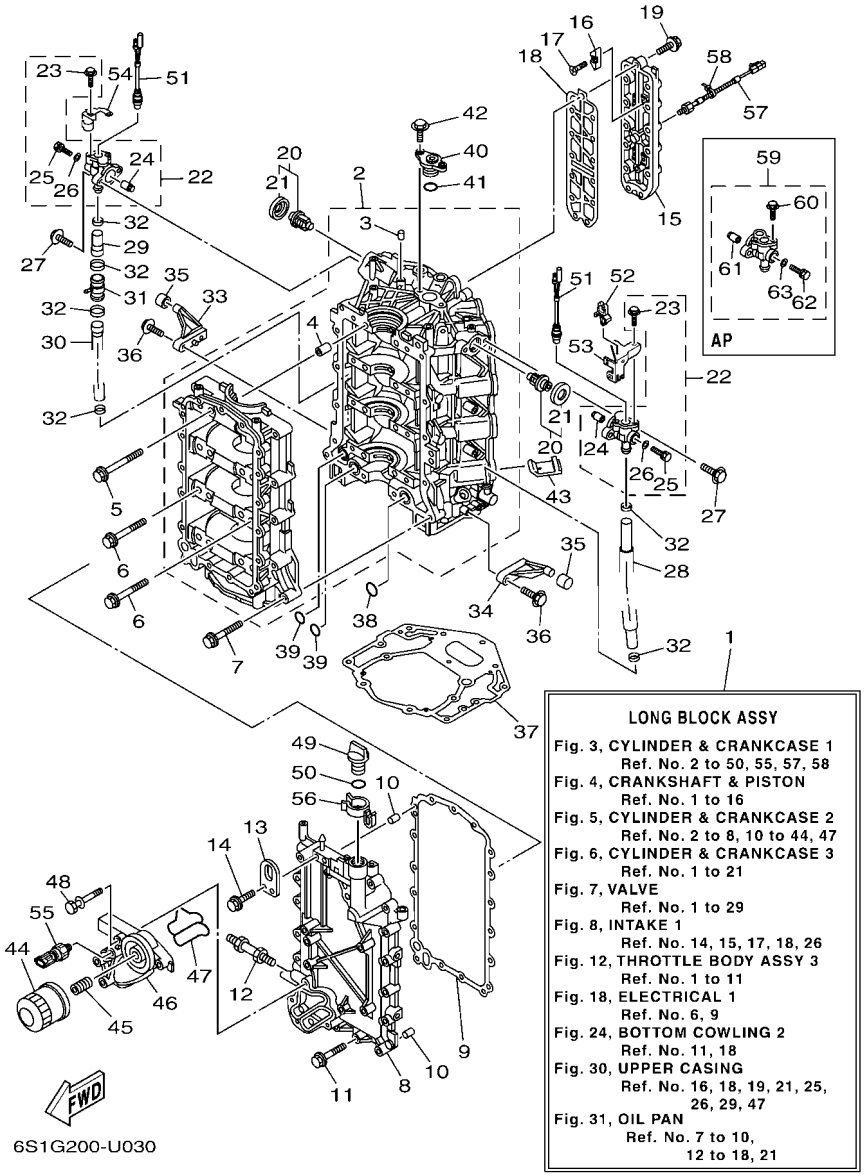

FIG. 3 CYLINDER & CRANKCASE 1 — CILINDRO & CARTER 1

REF. NO.	PART NO. CODIGO Nº	DESCRIPTION DESCRIPCION	6S1M	CAR	6S2M			REMARKS OBSERVACIONES
55	6AW–83651–01	SENDER, OIL PRESSURE TRASMISOR DE PRESION DE ACEITE	1	1	1			
56	6P2–83597–00	CLAMP GRAMPA	1	1	1			
57	6P2–85780–01	SENSOR, KNOCK CHOCAR SENSORIO	1	1	1			
58	90465–11M10	CLAMP BRIDA	1	1	1			
59	6P3–1240H–00–9S	ANODE ASSY ANODO COMPLET	1	1	1			AP AP
60	90109–06M80	.BOLT .PERNO	2	2	2			
61	6P3–11325–00	.ANODE .ANODO	1	1	1			
62	90105–05012	.BOLT, FLANGE .TORNILLO	1	1	1			
63	90430–05002	.GASKET .JUNTA	1	1	1			

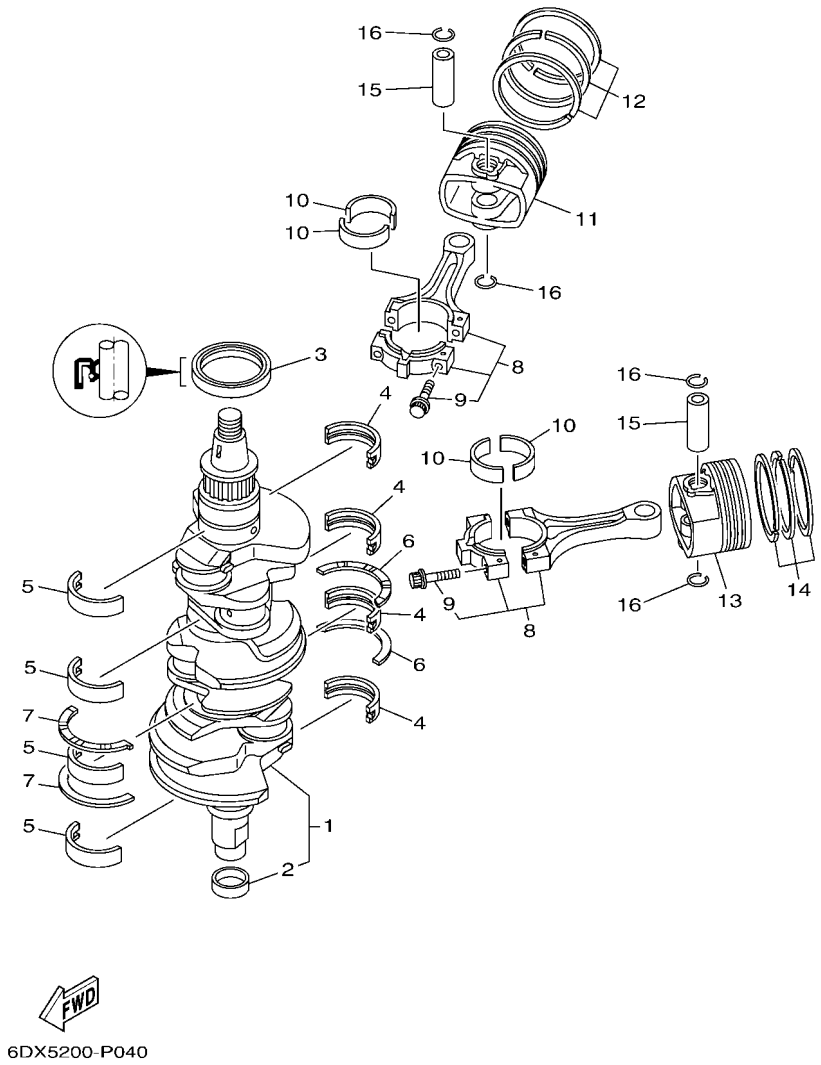

FIG. 4 CRANKSHAFT & PISTON — CIGUENAL & PISTON

REF. NO.	PART NO. CODIGO Nº	DESCRIPTION DESCRIPCION	6S1M	CAR	6S2M			REMARKS OBSERVACIONES
1	6P2–11410–10	CRANKSHAFT CIGUENAL	1	1	1			
2	6CB–11478–00	.COLLAR .COLLAR	1	1	1			
3	93102–63004	OIL SEAL SELLO ACEITE	1	1	1			
4	6P2–11416–00	PLANE BEARING, CRANKSHAFT 1 COJINETE PLANO 1	4	4	4			UR YELLOW UR YELLOW
	6P2–11416–10	PLANE BEARING, CRANKSHAFT 1 COJINETE PLANO 1	4	4	4			UR GREEN UR GREEN
	6P2–11416–20	PLANE BEARING, CRANKSHAFT 1 COJINETE PLANO 1	4	4	4			UR BLUE UR BLUE
5	6P2–11417–00	PLANE BEARING, CRANKSHAFT 2 COJINETE PLANO 2	4	4	4			UR YELLOW UR YELLOW
	6P2–11417–10	PLANE BEARING, CRANKSHAFT 2 COJINETE PLANO 2	4	4	4			UR GREEN UR GREEN
	6P2–11417–20	PLANE BEARING, CRANKSHAFT 2 COJINETE PLANO 2	4	4	4			UR BLUE UR BLUE
6	6AW–11426–01	BEARING, THRUST 1 COJINETE DE EMPUJE 1	2	2	2			
7	6AW–11427–01	BEARING, THRUST 2 COJINETE DE EMPUJE 2	2	2	2			
8	6P2–11650–00	CONNECTING ROD ASSY BIELA COMPLETA	6	6	6			
9	63P–11654–10	.BOLT, CONNECTING ROD .TORNILLO DE BIELA	2	2	2			
10	6S1–11656–00	PLANE BEARING, CONNECTING ROD COJINETE PLANO	12	12	12			UR YELLOW UR YELLOW
	6S1–11656–10	PLANE BEARING, CONNECTING ROD COJINETE PLANO	12	12	12			UR GREEN UR GREEN
	6S1–11656–20	PLANE BEARING, CONNECTING ROD COJINETE PLANO	12	12	12			UR BLUE UR BLUE
11	6DX–11631–01–93	PISTON (STD) PISTON (NORMA)	3	3	3			
	6DX–11635–00	PISTON (0.25MM O/S) PISTON (0.25MM O/S)	3	3	3			AP AP
12	6S1–11603–00	PISTON RING SET (STD) JUEGO DE ANILLOS (NORMA)	3	3	3			
	6S1–11604–00	PISTON RING SET (0.25MM O/S) JUEGO DE ANILLOS (0.25MM O/S)	3	3	3			AP AP
13	6DX–11642–01–93	PISTON 2 (STD) PISTON 2 (NORMA)	3	3	3			
	6DX–11645–00	PISTON 2 (0.25MM O/S) PISTON 2 (0.25MM O/S)	3	3	3			AP AP
14	6S1–11603–00	PISTON RING SET (STD) JUEGO DE ANILLOS (NORMA)	3	3	3			
	6S1–11604–00	PISTON RING SET (0.25MM O/S) JUEGO DE ANILLOS (0.25MM O/S)	3	3	3			AP AP
15	63P–11633–10	PIN, PISTON PASADOR, PISTON	6	6	6			
16	63P–11634–00	CLIP, PISTON PIN PRESILLA, BULON DE PISTON	12	12	12			

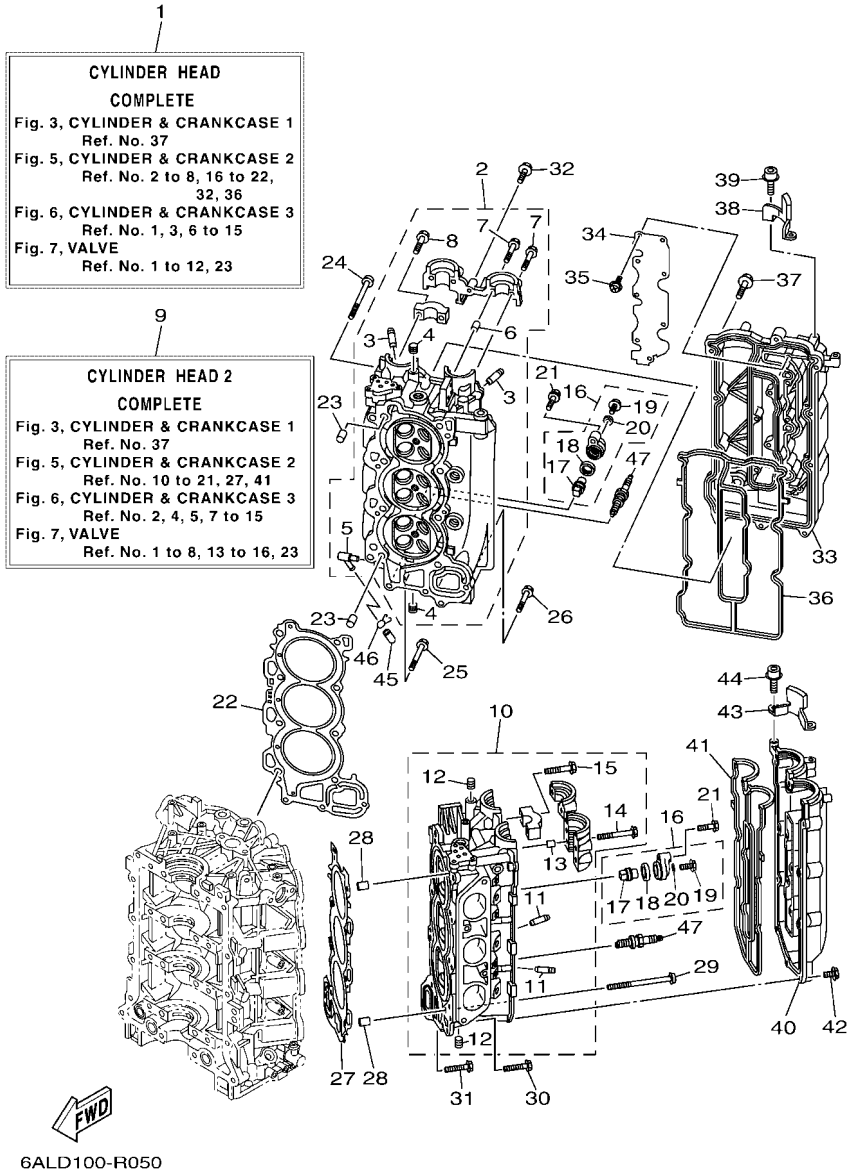

6ALD100-R050

FIG. 5 CYLINDER & CRANKCASE 2 — CILINDRO & CARTER 2

REF. NO.	PART NO. CODIGO Nº	DESCRIPTION DESCRIPCION	6S1M	CAR	6S2M			REMARKS OBSERVACIONES
1	6P2–W009A–07–9S	CYLINDER HEAD COMPLETE CILINDRD CULATA COMPLETO	1	1	1			
2	6P2–11110–12–9S	CYLINDER HEAD ASSY CULATA DE CILINDRO COMPLETA	1	1	1			
3	6S5–11133–10	.GUIDE, VALVE 1 .GUIA DE VALVULA 1	12	12	12			
4	90344–51019	.PLUG, TAPER SCREW .TAPON DE TORNILLO AHUSADO	7	7	7			
5	676–11372–00	.NIPPLE, HOSE .NIPLE DE MANGUERA	1	1	1			
6	91809–08006	.PIN, DOWEL .PASADOR DE CLAVIJA	2	2	2			
7	90119–07001	.BOLT, WITH WASHER .TORNILLO CON ARANDELA	4	4	4			
8	90119–07234	.BOLT, WITH WASHER .TORNILLO CON ARANDELA	14	14	14			
9	6P2–W009C–07–9S	CYLINDER HEAD 2 COMPLETE CULATA DE CILINDRO COMPL. 2	1	1	1			
10	6P2–11120–12–9S	CYLINDER HEAD ASSY 2 CULATA DE CILINDRO COMPL. 2	1	1	1			
11	6S5–11133–10	.GUIDE, VALVE 1 .GUIA DE VALVULA 1	12	12	12			
12	90344–51019	.PLUG, TAPER SCREW .TAPON DE TORNILLO AHUSADO	3	3	3			
13	91809–08006	.PIN, DOWEL .PASADOR DE CLAVIJA	4	4	4			
14	90119–07235	.BOLT/WASHER-CAM CAPS .TORNILLO CON ARANDELA	6	6	6			
15	90119–07234	.BOLT, WITH WASHER .TORNILLO CON ARANDELA	12	12	12			
16	69J–11301–02	ANODE COVER ASSY CONJUNTO CUBIERTA DE ANODO	4	4	4			
17	6ML–11325–00	.ANODE .ANODO	1	1	1			
18	67F–11328–01	.GROMMET, ANODE .TAPON	1	1	1			
19	90105–06M07	.BOLT, FLANGE .TORNILLO	1	1	1			
20	90430–06M03	.GASKET .JUNTA	1	1	1			
21	97E75–08540	BOLT, HEXAGON W/W DEEP RECESS TORNILLO HEXAGONAL CON RONDONA	4	4	4			
22	6P2–11181–00	GASKET, CYLINDER HEAD 1 JUNTA, DE CULATA 1	1	1	1			
23	99530–14016	PIN, DOWEL PASADOR, DE ESPIGA	2	2	2			
24	90155–10009	SCREW, FLAT FILLISTER TORNILLO CABEZA PLANA RAN.	8	8	8			
25	90119–08M91	BOLT, WITH WASHER TORNILLO CON ARANDELA	2	2	2			
26	90119–08021	BOLT, WITH WASHER TORNILLO CON ARANDELA	1	1	1			
27	6P2–11182–00	GASKET, CYLINDER HEAD 2 EMPAQUE CULATA DE CILINDRO 2	1	1	1			

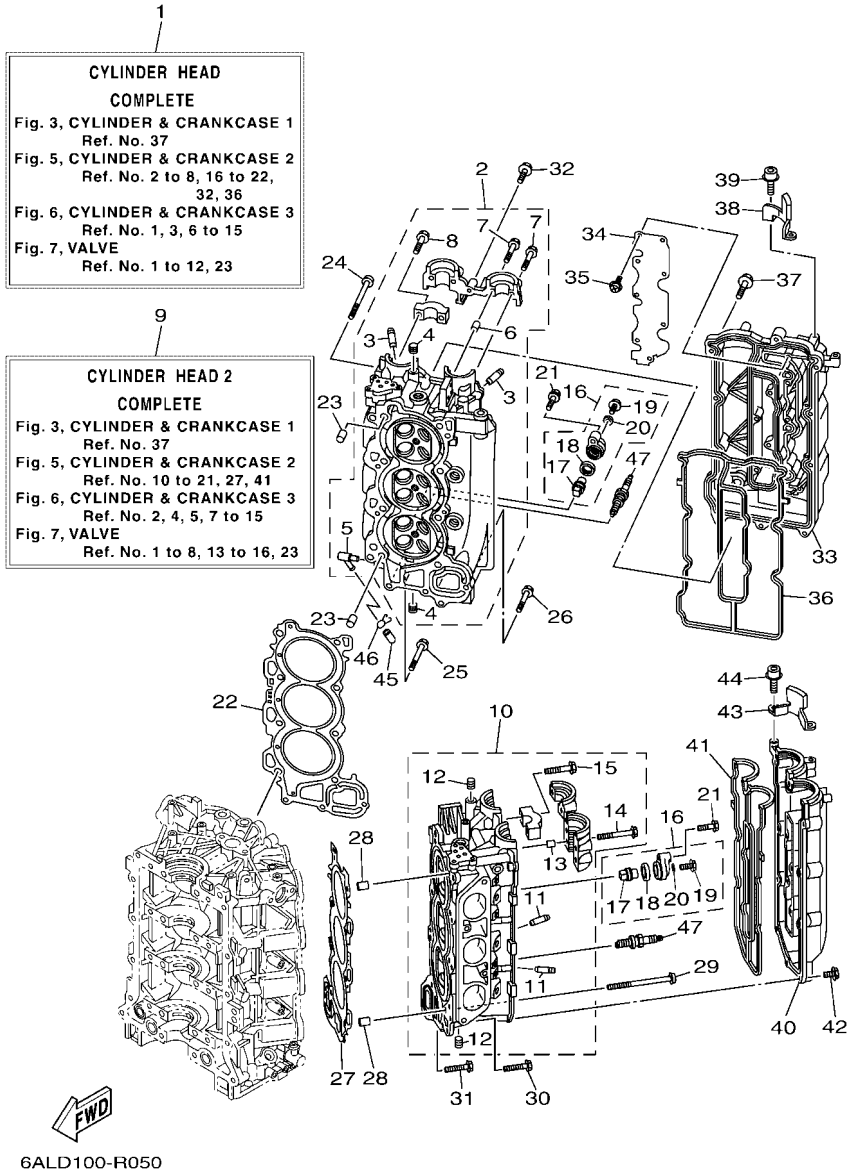

6ALD100-R050

FIG. 5 CYLINDER & CRANKCASE 2 — CILINDRO & CARTER 2

REF. NO.	PART NO. CODIGO Nº	DESCRIPTION DESCRIPCION	6S1M	CAR	6S2M			REMARKS OBSERVACIONES
28	99530–14016	PIN, DOWEL PASADOR, DE ESPIGA	2	2	2			
29	90155–10009	SCREW, FLAT FILLISTER TORNILLO CABEZA PLANA RAN.	8	8	8			
30	90119–08M91	BOLT, WITH WASHER TORNILLO CON ARANDELA	2	2	2			
31	90119–08021	BOLT, WITH WASHER TORNILLO CON ARANDELA	1	1	1			
32	97E95–06530	BOLT, HEXAGON W/W DEEP RECESS TORNILLO HEXAGONAL CON RONDONA	1	1	1			
33	6P2–11191–00–9S	COVER, CYLINDER HEAD 1 TAPA CULATA DE CILINDRO 1	1	1	1			
34	6P2–11135–00	PLATE, BREATHER 3 PLACA RESPIRADERO 3	1	1	1			
35	97607–04208	SCREW, WITH WASHER TORNILLO CAB CON PLANA C/ARAN	8	8	8			
36	6P2–11193–00	GASKET, HEAD COVER 1 EMPAQUE	1	1	1			
37	97E95–06530	BOLT, HEXAGON W/W DEEP RECESS TORNILLO HEXAGONAL CON RONDONA	14	14	14			
38	6P2–15142–00	GUIDE 1 GUIA 1.	1	1	1			
39	90110–06150	BOLT, HEXAGON SOCKET HEAD TORNILLO ALLEN	2	2	2			
40	6P2–11192–00–9S	COVER, CYLINDER HEAD 2 TAPA CULATA DE CILINDRO 2	1	1	1			
41	6P2–11194–00	GASKET, HEAD COVER 2 EMPAQUE DE TAPA DE CULATA 2	1	1	1			
42	97E95–06530	BOLT, HEXAGON W/W DEEP RECESS TORNILLO HEXAGONAL CON RONDONA	14	14	14			
43	6P2–15143–00	GUIDE GUIA	1	1	1			
44	90110–06150	BOLT, HEXAGON SOCKET HEAD TORNILLO ALLEN	2	2	2			
45	6P2–13448–00	CAP TAPA	1	1	1			
46	90467–08M18	CLIP PRESILLA	1	1	1			
47	94702–00400	PLUG, SPARK (NGK LFR6A-11) BUJIA (NGK LFR6A-11)	6	6	6			

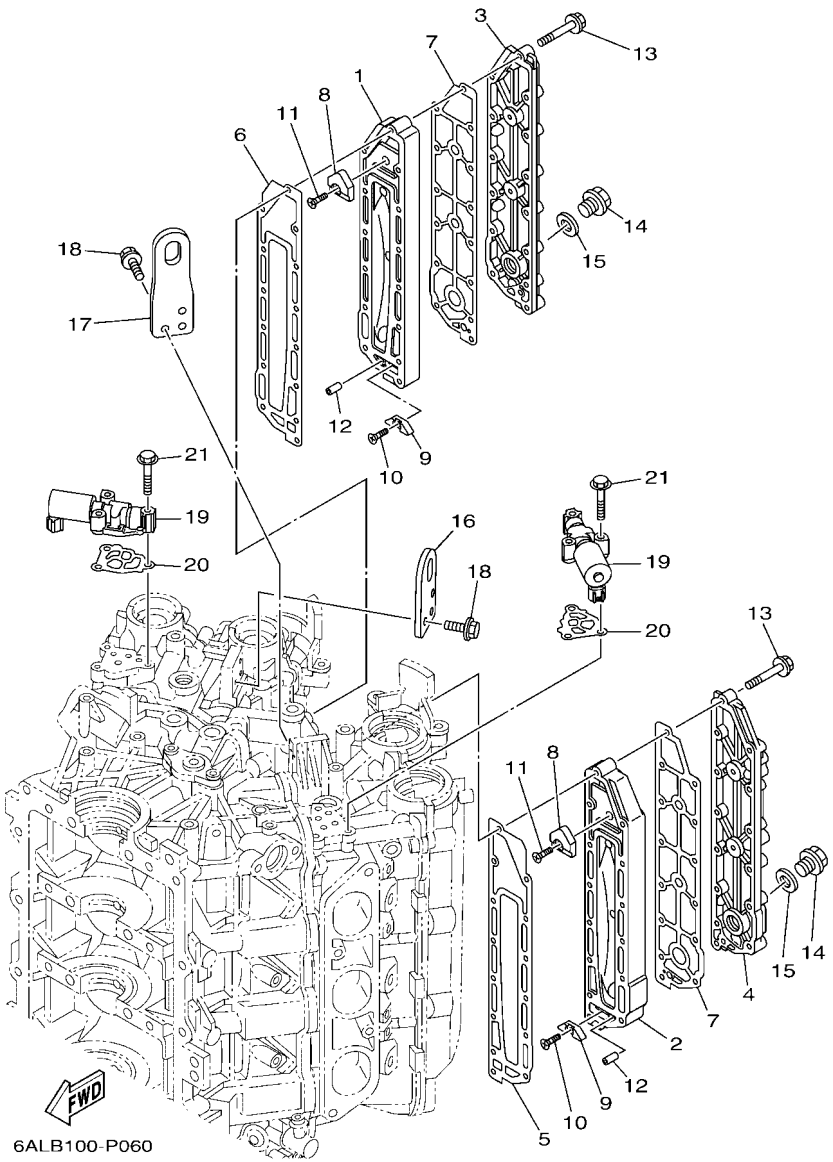

FIG. 6 CYLINDER & CRANKCASE 3 — CILINDRO & CARTER 3

REF. NO.	PART NO. CODIGO Nº	DESCRIPTION DESCRIPCION	6S1M	CAR	6S2M			REMARKS OBSERVACIONES
1	69J–41111–01–9S	INNER COVER, EXHAUST CUBIERTA INTERIOR DE ESCAPE	1	1	1			
2	69J–41121–01–9S	INNER COVER,EXHAUST CUBIERTA INTERIOR DE ESCAPE	1	1	1			
3	69J–41113–02–9S	OUTER COVER, EXHAUST CUBOERTA EXTERIOR DE ESCAPE	1	1	1			
4	69J–41123–02–9S	OUTER COVER, EXHAUST CUBOERTA EXTERIOR DE ESCAPE	1	1	1			
5	6P2–41112–00	GASKET, EXHAUST INNER COVER EMPAQUE	1	1	1			
6	6P2–41122–00	GASKET, EXHAUST INNER COVER EMPAQUE	1	1	1			
7	6P2–41114–00	GASKET, EXHAUST OUTER COVER EMPAQUE	2	2	2			
8	6P2–11325–00	ANODE ANODO	2	2	2			
9	6E5–11325–00	ANODE ANODO	2	2	2			
10	98780–04016	SCREW, FLAT HEAD TORNILLO, CABEZA PLANA	2	2	2			
11	90151–06M02	SCREW, COUNTERSUNK TORNILLO EMBUTIDO	2	2	2			
12	91690–40010	PIN, SPRING PASADOR DE RESORTE	2	2	2			
13	90119–06027	BOLT, WITH WASHER TORNILLO CON ARANDELA	28	28	28			
14	90340–18M09	PLUG, STRAIGHT SCREW TORNILLO, DE DRENAJE	2	2	2			
15	90201–186F1	WASHER, PLATE ARANDELA PLANA	2	2	2			
16	6P2–11119–00	HANGER, ENGINE SOPORTE DEL MOTOR	1	1	1			
17	6P2–1111E–00	HANGER, ENGINE 2 MOTOR DE COLGADOR 2	1	1	1			
18	90105–06M09	BOLT, FLANGE TORNILLO	6	6	6			
19	6CB–86120–00	SOLENOID VALVE ASSY VALVULA SOLENOIDE CONJ.	2	2	2			
20	6CB–1242F–00	GASKET, FILTER EMPAQUE DE FILTRO	2	2	2			
21	90105–06035	BOLT, FLANGE TORNILLO	6	6	6			

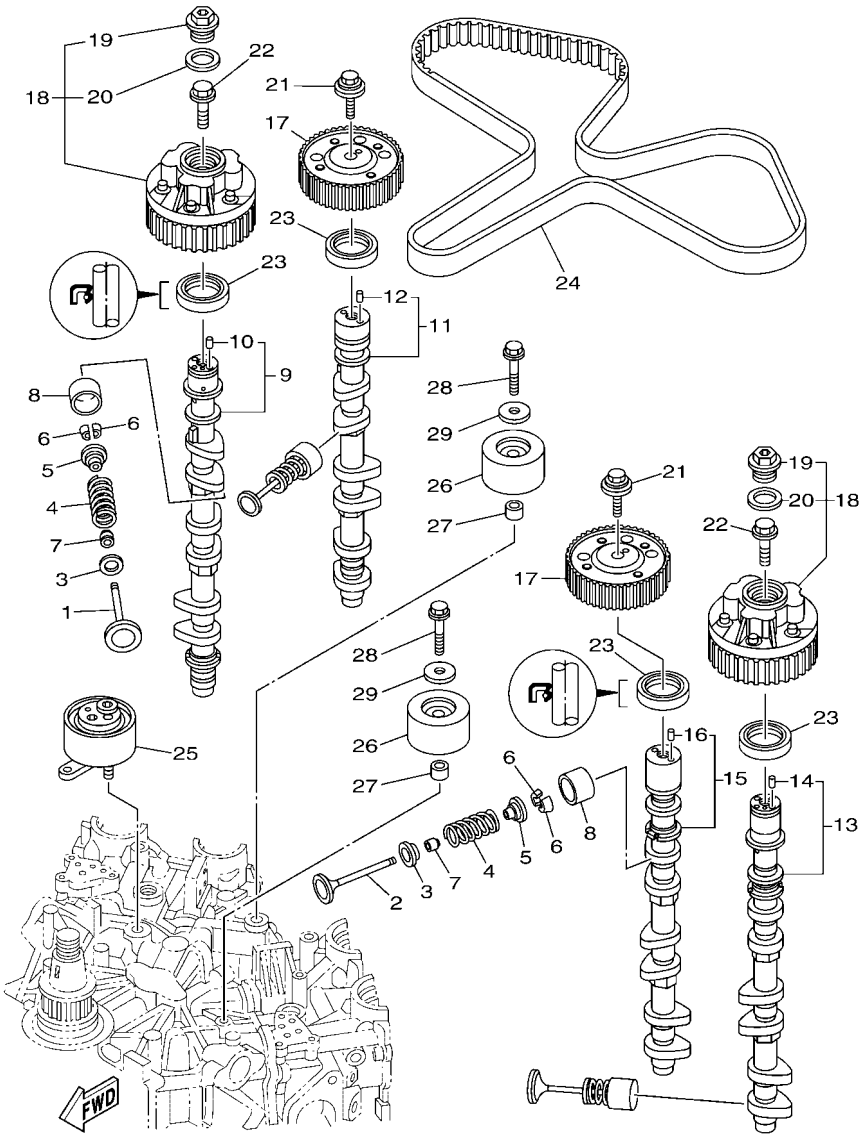

6ALC100-Q070

FIG. 7 VALVE — VALVULA

REF. NO.	PART NO. CODIGO Nº	DESCRIPTION DESCRIPCION	6S1M	CAR	6S2M			REMARKS OBSERVACIONES
1	6P2–12111–10	VALVE, INTAKE VALVULA DE ADMISION	12	12	12			
2	6DX–12121–00	VALVE, EXHAUST VALVULA DE ESCAPE	12	12	12			
3	K0F–A3743–00	SEAT, VALVE SPRING ASIENTO RESORTE DE VALVULA	24	24	24			
4	6CB–12113–00	SPRING, VALVE INNER RESORTE VALVULA INTERNA	24	24	24			
5	K0F–A3741–00	RETAINER, VALVE SPRING RETEN RESORTE DE VALVULA	24	24	24			
6	K0F–A3742–00	LOCK, VALVE SPRING RETAINER SEGURO DE VALVULA	48	48	48			
7	51Y–12119–00	SEAL, VALVE STEM SELLO DE ACEITE VALVULA	24	24	24			
8	K0F–A3751–00	LIFTER, VALVE (3.000) LEVANTADOR DE VALVULA (3.000)	24	24	24			UR UR
	K0F–A3751–10	LIFTER, VALVE (3.025) LEVANTADOR DE VALVULA (3.025)	24	24	24			UR UR
	K0F–A3751–20	LIFTER, VALVE (3.050) LEVANTADOR DE VALVULA (3.050)	24	24	24			UR UR
	K0F–A3751–30	LIFTER, VALVE (3.075) LEVANTADOR DE VALVULA (3.075)	24	24	24			UR UR
	K0F–A3751–40	LIFTER, VALVE (3.100) LEVANTADOR DE VALVULA (3.100)	24	24	24			UR UR
	K0F–A3751–50	LIFTER, VALVE (3.122) LEVANTADOR DE VALVULA (3.122)	24	24	24			UR UR
	K0F–A3751–60	LIFTER, VALVE (3.142) LEVANTADOR DE VALVULA (3.142)	24	24	24			UR UR
	K0F–A3751–70	LIFTER, VALVE (3.162) LEVANTADOR DE VALVULA (3.162)	24	24	24			UR UR
	K0F–A3751–80	LIFTER, VALVE (3.182) LEVANTADOR DE VALVULA (3.182)	24	24	24			UR UR
	K0F–A3751–90	LIFTER, VALVE (3.202) LEVANTADOR DE VALVULA (3.202)	24	24	24			UR UR
	K0F–A3751–A0	LIFTER, VALVE (3.222) LEVANTADOR DE VALVULA (3.222)	24	24	24			UR UR
	K0F–A3751–B0	LIFTER, VALVE (3.242) LEVANTADOR DE VALVULA (3.242)	24	24	24			UR UR
	K0F–A3751–C0	LIFTER, VALVE (3.262) LEVANTADOR DE VALVULA (3.262)	24	24	24			UR UR
	K0F–A3751–D0	LIFTER, VALVE (3.282) LEVANTADOR DE VALVULA (3.282)	24	24	24			UR UR
	K0F–A3751–E0	LIFTER, VALVE (3.302) LEVANTADOR DE VALVULA (3.302)	24	24	24			UR UR
	K0F–A3751–F0	LIFTER, VALVE (3.322) LEVANTADOR DE VALVULA (3.322)	24	24	24			UR UR
	K0F–A3751–G0	LIFTER, VALVE (3.342) LEVANTADOR DE VALVULA (3.342)	24	24	24			UR UR
	K0F–A3751–H0	LIFTER, VALVE (3.362) LEVANTADOR DE VALVULA (3.362)	24	24	24			UR UR
	K0F–A3751–J0	LIFTER, VALVE (3.382) LEVANTADOR DE VALVULA (3.382)	24	24	24			UR UR
	K0F–A3751–K0	LIFTER, VALVE (3.402) LEVANTADOR DE VALVULA (3.402)	24	24	24			UR UR

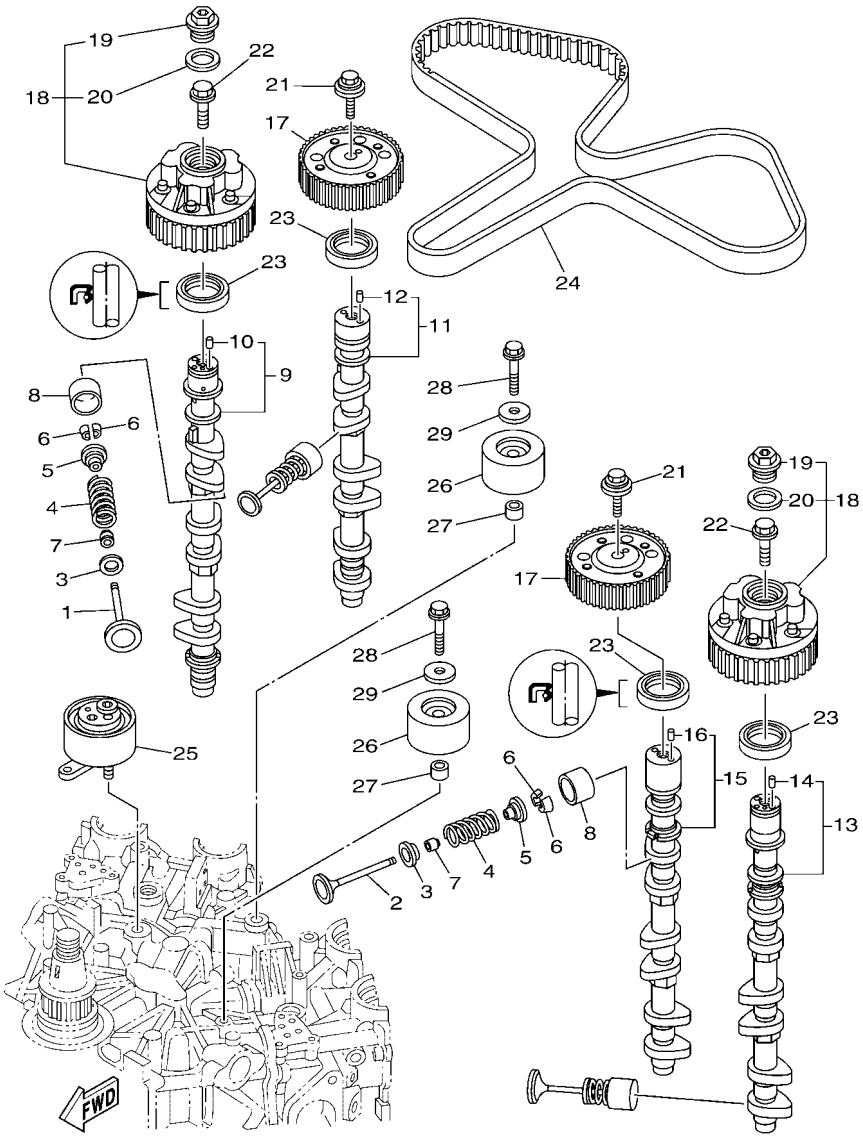

6ALC100-Q070

FIG. 7 VALVE — VALVULA

REF. NO.	PART NO. CODIGO Nº	DESCRIPTION DESCRIPCION	6S1M	CAR	6S2M			REMARKS OBSERVACIONES
8	K0F–A3751–L0	LIFTER, VALVE (3.422) LEVANTADOR DE VALVULA (3.422)	24	24	24			UR UR
	K0F–A3751–M0	LIFTER, VALVE (3.442) LEVANTADOR DE VALVULA (3.442)	24	24	24			UR UR
	K0F–A3751–N0	LIFTER, VALVE (3.462) LEVANTADOR DE VALVULA (3.462)	24	24	24			UR UR
	K0F–A3751–P0	LIFTER, VALVE (3.482) LEVANTADOR DE VALVULA (3.482)	24	24	24			UR UR
	K0F–A3751–R0	LIFTER, VALVE (3.502) LEVANTADOR DE VALVULA (3.502)	24	24	24			UR UR
	K0F–A3751–S0	LIFTER, VALVE (3.522) LEVANTADOR DE VALVULA (3.522)	24	24	24			UR UR
	K0F–A3751–T0	LIFTER, VALVE (3.542) LEVANTADOR DE VALVULA (3.542)	24	24	24			UR UR
	K0F–A3753–00	LIFTER, VALVE (3.562) LEVANTADOR DE VALVULA (3.562)	24	24	24			UR UR
	K0F–A3753–10	LIFTER, VALVE (3.582) LEVANTADOR DE VALVULA (3.582)	24	24	24			UR UR
	K0F–A3753–20	LIFTER, VALVE (3.602) LEVANTADOR DE VALVULA (3.602)	24	24	24			UR UR
	K0F–A3753–30	LIFTER, VALVE (3.625) LEVANTADOR DE VALVULA (3.625)	24	24	24			UR UR
	K0F–A3753–40	LIFTER, VALVE (3.650) LEVANTADOR DE VALVULA (3.650)	24	24	24			UR UR
	K0F–A3753–50	LIFTER, VALVE (3.675) LEVANTADOR DE VALVULA (3.675)	24	24	24			UR UR
	K0F–A3753–60	LIFTER, VALVE (3.700) LEVANTADOR DE VALVULA (3.700)	24	24	24			UR UR
	K0F–A3753–70	LIFTER, VALVE (3.725) LEVANTADOR DE VALVULA (3.725)	24	24	24			UR UR
9	6P2–12171–11	CAMSHAFT 1 ARBOL DE LEVAS 1	1	1	1			
10	93605–10108	.PIN, DOWEL .PASADOR DE CLAVIJA	1	1	1			
11	6P2–12181–11	CAMSHAFT 2 ARBOL DE LEVAS 2	1	1	1			
12	93605–10108	.PIN, DOWEL .PASADOR DE CLAVIJA	1	1	1			
13	6P2–12172–11	CAMSHAFT 3 ARBOL DE LEVAS 3	1	1	1			
14	93605–10108	.PIN, DOWEL .PASADOR DE CLAVIJA	1	1	1			
15	6P2–12182–11	CAMSHAFT 4 ARBOL DE LEVAS 4	1	1	1			
16	93605–10108	.PIN, DOWEL .PASADOR DE CLAVIJA	1	1	1			
17	6FA–11567–00	GEAR, DRIVEN 2 ENGRANAJE TRACCION 2	2	2	2			
18	6P2–12645–22	PULLEY ASSY 1 POLEA COMPL. 1	2	2	2			
19	6P2–12623–00	.BOLT .PERNO	1	1	1			
20	6P2–12663–00	.GASKET .EMPAQUE	1	1	1			

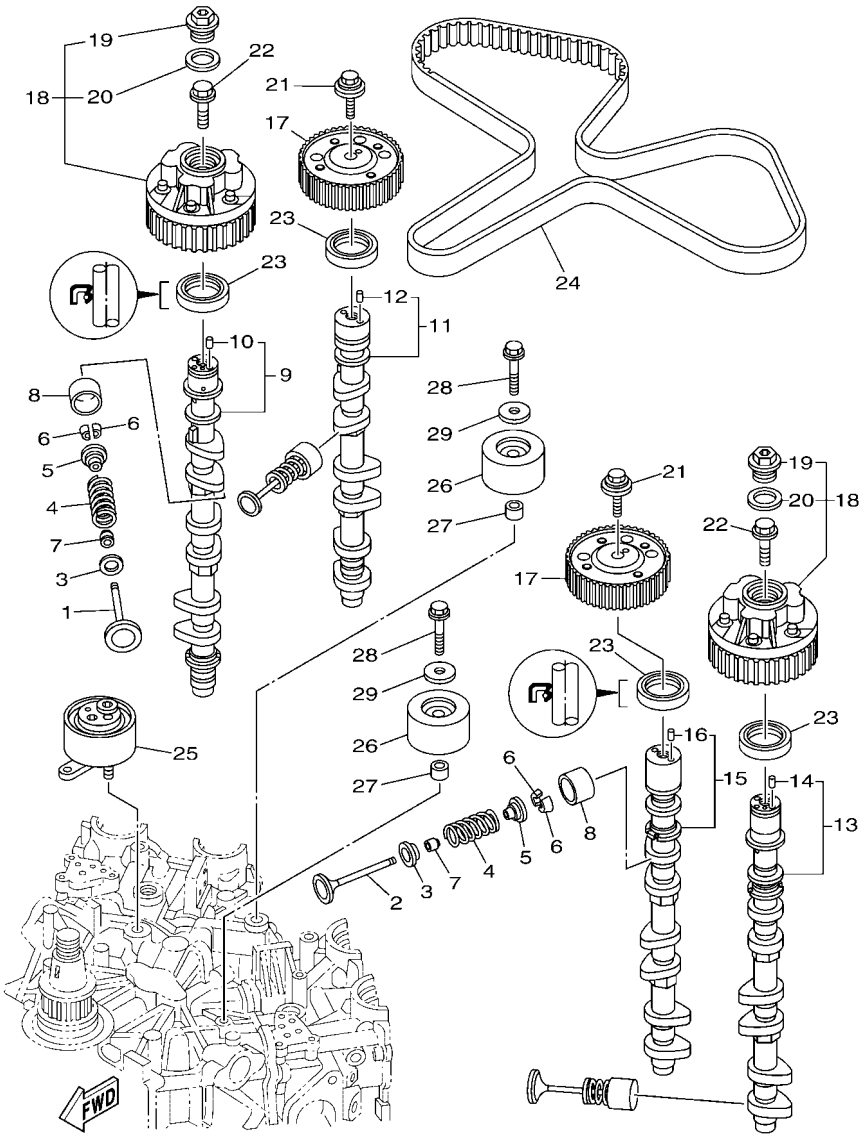

6ALC100-Q070

FIG. 7 VALVE — VALVULA

REF. NO.	PART NO. CODIGO Nº	DESCRIPTION DESCRIPCION	6S1M	CAR	6S2M			REMARKS OBSERVACIONES
21	90119–10050	BOLT, WITH WASHER TORNILLO CON ARANDELA	2	2	2			
22	6P2–12615–00	BOLT PERNO	2	2	2			
23	93102–38008	OIL SEAL SELLO ACEITE	4	4	4			
24	6P2–46241–02	BELT CORREA	1	1	1			
25	6P2–11590–05	TENSIONER ASSY TENSOR COMPLET	1	1	1			
26	6P2–15512–00	GEAR, IDLER 1 ENGRENAJE NEUTRO	2	2	2			
27	99530–14016	PIN, DOWEL PASADOR, DE ESPIGA	2	2	2			
28	90119–10M07	BOLT, WITH WASHER TORNILLO CON ARANDELA	2	2	2			
29	90201–10M01	WASHER, PLATE ARANDELA PLANA	2	2	2			

FIG. 8 INTAKE 1 — ADMISION 1

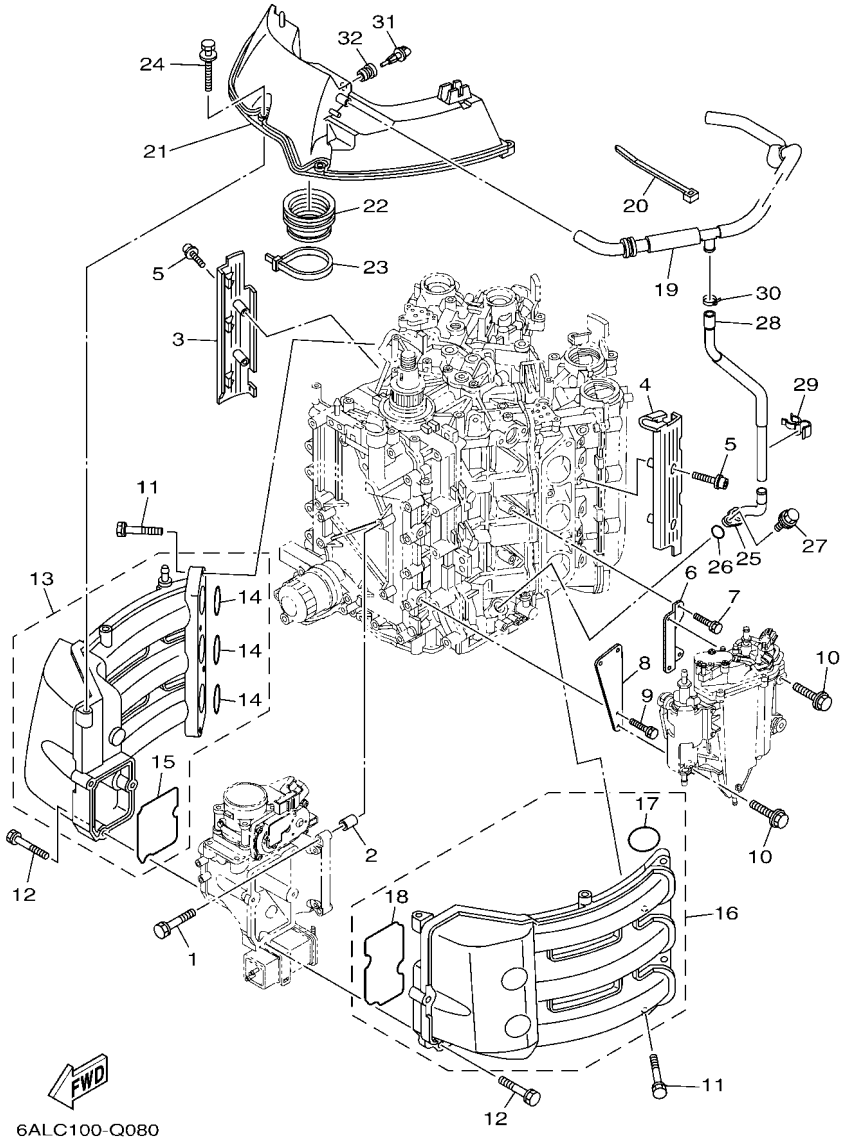

REF. NO.	PART NO. CODIGO Nº	DESCRIPTION DESCRIPCION	6S1M	CAR	6S2M			REMARKS OBSERVACIONES
1	97E75–08540	BOLT, HEXAGON W/W DEEP RECESS TORNILLO HEXAGONAL CON RONDONA	4	4	4			
2	99530–10114	PIN, DOWEL PASADOR, DE ESPIGA	2	2	2			
3	6P2–13564–00	COVER, MANIFOLD CUBIERTA DE MULTIPLE	1	1	1			
4	6P2–13594–00	COVER, MANIFOLD 2 CUBIERTA MULTIPLE 2	1	1	1			
5	90110–06038	BOLT, HEXAGON SOCKET HEAD TORNILLO ALLEN	4	4	4			
6	6P2–24422–10	PLATE PLACA	1	1	1			
7	97E75–06516	BOLT, HEXAGON W/W DEEP RECESS TORNILLO HEXAGONAL CON RONDONA	2	2	2			
8	6P2–24419–00	BRKT., SEPARATOR SOPORTE SEPARADOR	1	1	1			
9	97E75–06516	BOLT, HEXAGON W/W DEEP RECESS TORNILLO HEXAGONAL CON RONDONA	2	2	2			
10	90119–06299	BOLT, WITH WASHER TORNILLO CON ARANDELA	4	4	4			
11	97E75–08540	BOLT, HEXAGON W/W DEEP RECESS TORNILLO HEXAGONAL CON RONDONA	8	8	8			
12	90119–06MA6	BOLT, WITH WASHER TORNILLO CON ARANDELA	7	7	7			
13	6P2–13641–00	MANIFOLD, INTAKE 1 CONECTOR DE ADMISSION 1	1	1	1			
14	6P2–13645–00	.GASKET, MANIFOLD 1 .EMPAQUE	3	3	3			
15	6P2–13646–00	.GASKET, MANIFOLD 2 .EMPAQ. DE MULTIPLE 2	1	1	1			
16	6P2–13642–00	MANIFOLD 2 MULTIPLE 2	1	1	1			
17	6P2–13645–00	.GASKET, MANIFOLD 1 .EMPAQUE	3	3	3			
18	6P2–13647–00	.GASKET, MANIFOLD 3 .EMPAQ. DE MULTIPLE 3	1	1	1			
19	6P2–15373–02	PIPE, BREATHER MANGUELA DE RESPIRADERO	1	1	1			
20	90465–13M18	CLAMP BRIDA	1	1	1			
21	6P2–14440–00	SILENCER ASSY, INTAKE SILENCIADOR COMPL DE ADMISION	1	1	1			
22	6P2–1441J–01	PIPE, SILENCER TUBO	1	1	1			
23	90464–99004	CLAMP BRIDA	1	1	1			
24	90119–06311	BOLT, WITH WASHER TORNILLO CON ARANDELA	4	4	4			
25	6P2–11372–00	NIPPLE, HOSE NIPLE DE MANGUERA	1	1	1			
26	93210–19MJ3	O-RING ANILLO O	1	1	1			
27	97E95–06620	BOLT, HEXAGON W/W DEEP RECESS TORNILLO HEXAGONAL CON RONDONA	1	1	1			

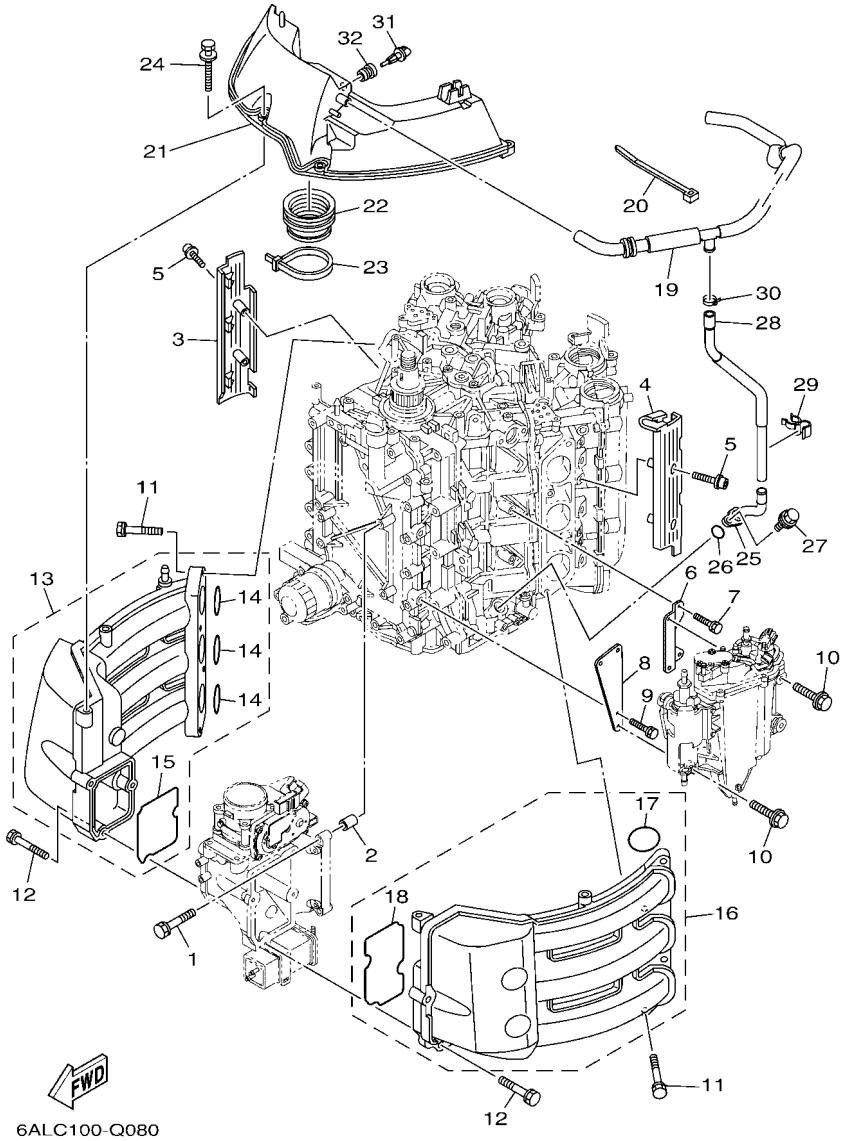

FIG. 8 INTAKE 1 — ADMISION 1

REF. NO.	PART NO. CODIGO Nº	DESCRIPTION DESCRIPCION	6S1M	CAR	6S2M			REMARKS OBSERVACIONES
28	6P2–11377–00	HOSE MANGUERA	1	1	1			
29	90464–20011	CLAMP BRIDA	1	1	1			
30	90465–11M10	CLAMP BRIDA	1	1	1			
31	63P–85886–00	SENSOR, AIR TEMPERATURE SENSOR	1	1	1			
32	63P–14435–00	GROMMET ANILLO PROTECTOR	1	1	1			

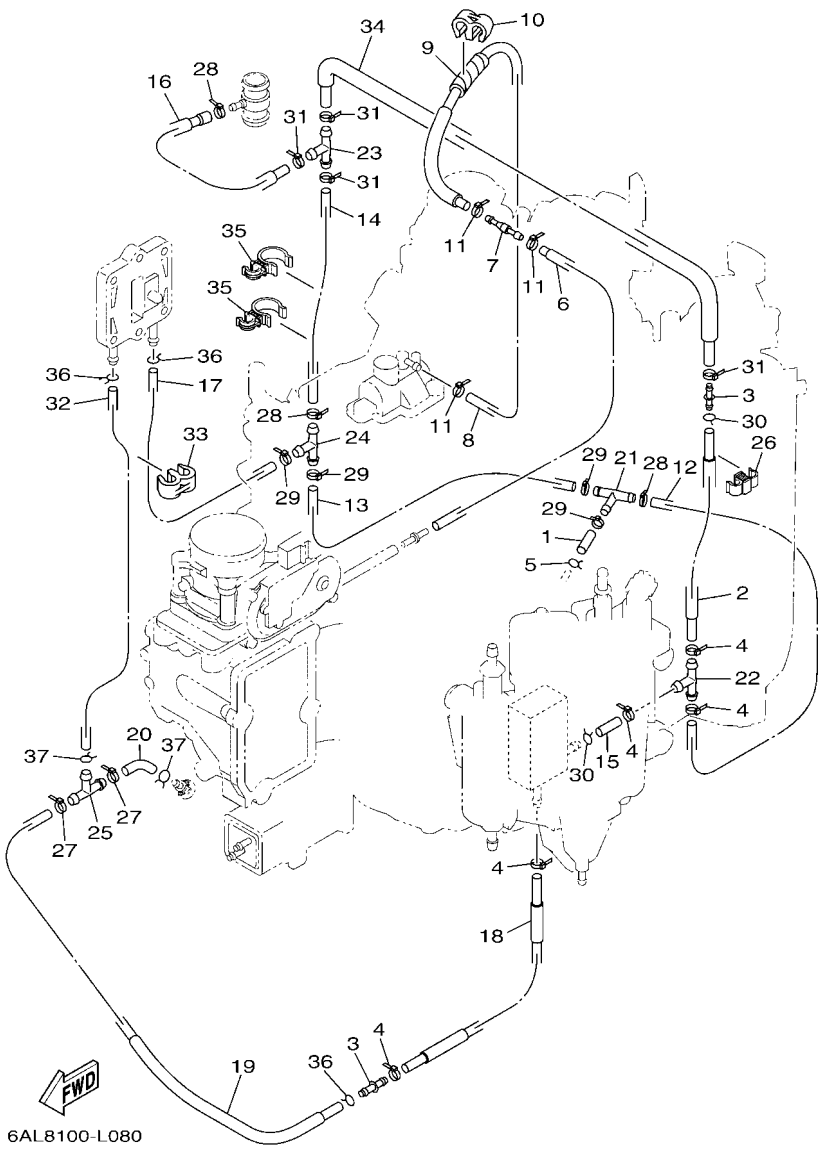

FIG. 9 INTAKE 2 — ADMISION 2

REF. NO.	PART NO. CODIGO Nº	DESCRIPTION DESCRIPCION	6S1M	CAR	6S2M			REMARKS OBSERVACIONES
1	90445–09040	HOSE (L50) TUBO (L50)	1	1	1			
2	6P2–12484–01	PIPE 4 TUBO 4	1	1	1			
3	6CE–24376–01	PIPE, JOINT 1 TUBO DE UNION 1	2	2	2			
4	90465–11M10	CLAMP BRIDA	5	5	5			
5	90467–09M03	CLIP PRESILLA	1	1	1			
6	6P2–12482–00	PIPE 2 TUBO 2	1	1	1			
7	6E5–21744–00	BREATHER RESPIRADERO	1	1	1			
8	6P2–12483–00	PIPE 3 TUBO 3	1	1	1			
9	90446–10M01	HOSE (L60) TUBO (L60)	1	1	1			
10	90464–60067	CLAMP BRIDA	1	1	1			
11	90465–11M10	CLAMP BRIDA	3	3	3			
12	90445–09041	HOSE (L500) TUBO (L500)	1	1	1			
13	90445–09224	HOSE (L270) TUBO (L270)	1	1	1			
14	90445–09097	HOSE (L250) TUBO (L250)	1	1	1			
15	90445–09220	HOSE (L30) TUBO (L30)	1	1	1			
16	6P2–12485–00	PIPE 5 TUBO 5	1	1	1			
17	6P2–1248A–00	PIPE 8 TUBO 8	1	1	1			
18	6P2–1248E–00	PIPE 9 TUBO	1	1	1			
19	6P2–14752–00	PIPE, OUTLET TUBO BOCA DE SALIDA	1	1	1			
20	61A–24316–00	PIPE 6 TUBO 6	1	1	1			
21	688–24378–00	PIPE, JOINT 3 TUBO DE UNION 3	1	1	1			
22	688–24378–00	PIPE, JOINT 3 TUBO DE UNION 3	1	1	1			
23	688–24378–00	PIPE, JOINT 3 TUBO DE UNION 3	1	1	1			
24	688–24378–00	PIPE, JOINT 3 TUBO DE UNION 3	1	1	1			
25	688–24378–00	PIPE, JOINT 3 TUBO DE UNION 3	1	1	1			
26	90464–09013	CLAMP BRIDA	1	1	1			
27	90465–11M10	CLAMP BRIDA	2	2	2			

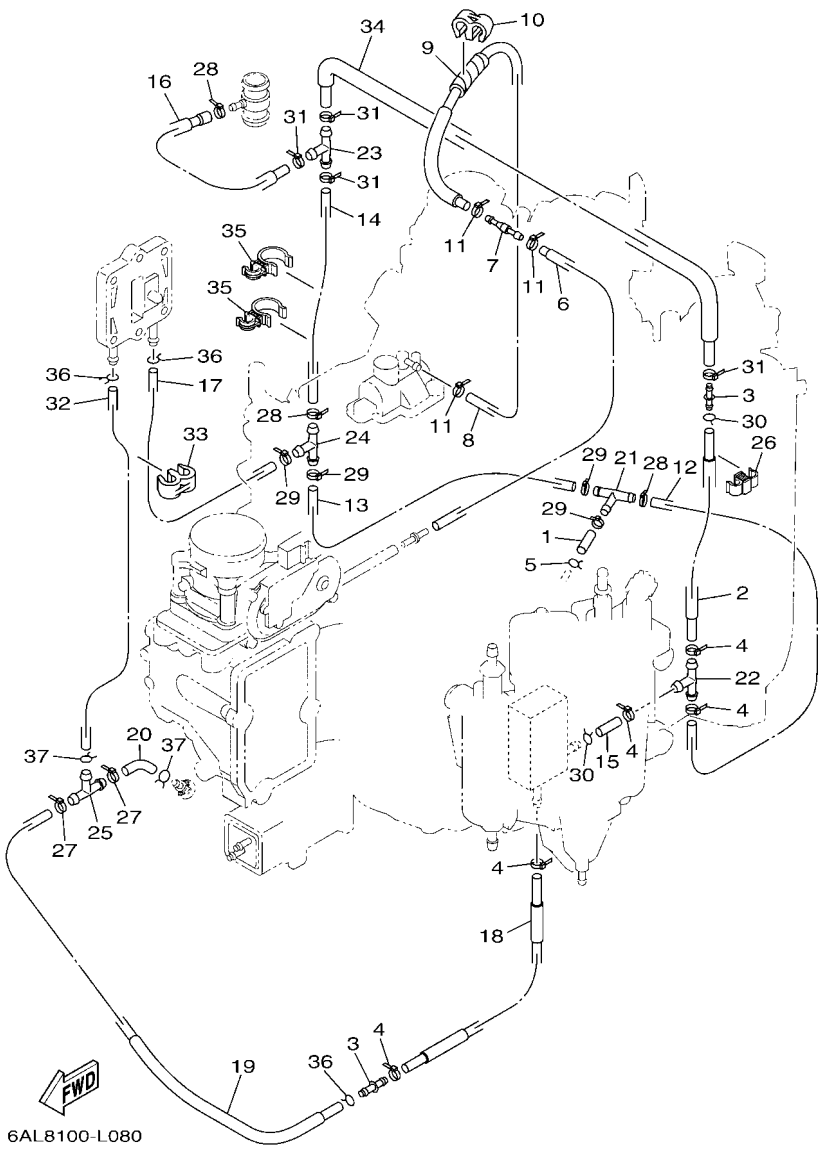

FIG. 9 INTAKE 2 — ADMISION 2

REF. NO.	PART NO. CODIGO Nº	DESCRIPTION DESCRIPCION	6S1M	CAR	6S2M			REMARKS OBSERVACIONES
28	90465–11M10	CLAMP BRIDA	3	3	3			
29	90465–11M10	CLAMP BRIDA	4	4	4			
30	90467–08M18	CLIP PRESILLA	2	2	2			
31	90465–11M10	CLAMP BRIDA	4	4	4			
32	90445–09304	HOSE (L310) TUBO (L310)	1	1	1			
33	90464–60067	CLAMP BRIDA	1	1	1			
34	6P2–12481–12	PIPE 1 TUBO 1	1	1	1			
35	90464–21002	CLAMP BRIDA	2	2	2			
36	90467–08M18	CLIP PRESILLA	3	3	3			
37	90467–09M09	CLIP PRESILLA	2	2	2			

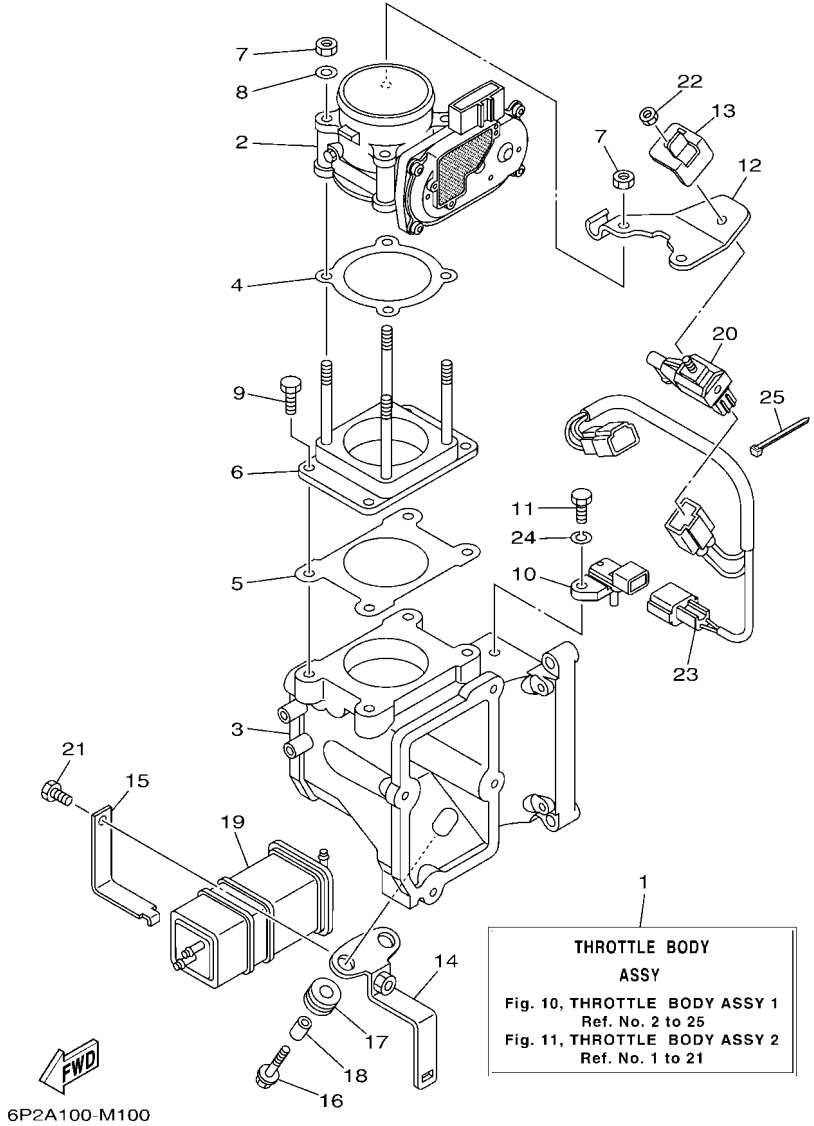

FIG. 10 THROTTLE BODY ASSY 1 — CAJA DE ACELERADOR COMPL 1

REF. NO.	PART NO. CODIGO Nº	DESCRIPTION DESCRIPCION	6S1M	CAR	6S2M			REMARKS OBSERVACIONES
1	6P2–13750–15	THROTTLE BODY ASSY CAJA DE ACELERADOR COMPL.	1	1	1			
2	6P2–13751–05	BODY, THROTTLE 1 CAJA 1	1	1	1			
3	6P2–13711–00	MIXING BODY CUERPO DE MEZCLA	1	1	1			
4	6P2–13556–00	GASKET, MANIFOLD EMPAQUE	1	1	1			
5	6P2–13557–00	GASKET EMPAQUE	1	1	1			
6	6P2–14360–00	THROTTLE DAMPER ASSY AMORTIGUADOR ARRANQUE COMPL.	1	1	1			
7	6P2–13588–01	NUT TUERCA	4	4	4			
8	6P2–13578–00	WASHER ARANDELA	2	2	2			
9	6P2–14496–00	BOLT PERNO	4	4	4			
10	6P2–82380–00	SENSOR, PRESSURE SENSOR DE PRESION	1	1	1			
11	6P2–13573–00	BOLT 1 PERNO 1	1	1	1			
12	6P2–14255–00	PLATE PLACA	1	1	1			
13	6P2–14159–00	CLIP PRESILLA	1	1	1			
14	6P2–2134X–00	BRACKET, CANISTER SOPORTE	1	1	1			
15	6P2–2419A–00	HOLDER SOSTEN	1	1	1			
16	90119–06289	BOLT, WITH WASHER TORNILLO CON ARANDELA	2	2	2			
17	90480–10M23	GROMMET TAPON	2	2	2			
18	90387–06289	COLLAR ESPACIADOR	2	2	2			
19	6P2–24170–00	CANISTER ASSY FRANJA DE DEPOSITO DE COMBUST.	1	1	1			
20	6C5–86120–00	SOLENOID VALVE ASSY VALVULA SOLENOIDE CONJ.	1	1	1			
21	6P2–13574–00	BOLT 2 PERNO 2	1	1	1			
22	69J–14164–00	NUT, HOLDING TUERCA DE SOSTEN	1	1	1			
23	6P2–8258A–00	EXTENSION, WIRE HARNESS EXTENSION, ARNES DE CABLES	1	1	1			
24	68V–14356–00	WASHER, SPRING ARANDELA DE RESORTE	1	1	1			
25	68V–2481H–00	CLAMP GRAMPA	1	1	1			

FIG. 11 THROTTLE BODY ASSY 2 — CAJA DE ACELERADOR COMPL 2

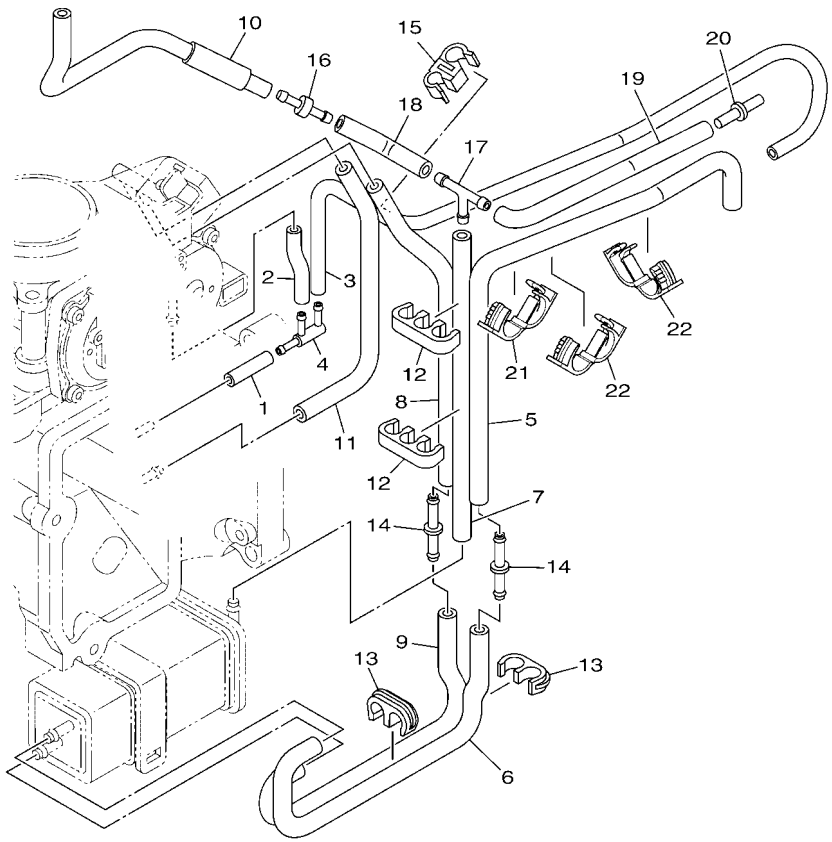

6P28110-L100

REF. NO.	PART NO. CODIGO Nº	DESCRIPTION DESCRIPCION	6S1M	CAR	6S2M			REMARKS OBSERVACIONES
1	6P2–14349–00	PIPE TUBO	1	1	1			
2	6P2–13533–00	HOSE, VACUUM SENSING 4 MANGUERA, DE VACIO 4	1	1	1			
3	6P2–13532–10	HOSE, VACUUM SENSING 3 MANGUERA, DE VACIO 3	1	1	1			
4	6P2–13595–00	JOINT TOBERA	1	1	1			
5	6P2–1475A–10	PIPE 1 TUBO 1	1	1	1			
6	6P2–1475E–00	PIPE 2 TUBO 2	1	1	1			
7	6P2–13545–00	HOSE 1 SELLO	1	1	1			
8	6P2–1475F–00	PIPE 3 TUBO 3	1	1	1			
9	6P2–1475G–00	PIPE 4 TUBO 4	1	1	1			
10	6P2–13546–00	HOSE 2 SELLO	1	1	1			
11	6P2–2416A–00	HOSE TUBO DE COMBUSTIBLE	1	1	1			
12	6P2–24135–00	CLAMP 1 GRAMPA 1	2	2	2			
13	6P2–24136–00	CLAMP 2 GRAMPA 2	2	2	2			
14	6P2–13758–00	PIPE, JOINT TUBO DE JUNTA	2	2	2			
15	6P2–24137–00	CLAMP 3 GRAMPA 3	1	1	1			
16	6E5–21744–00	BREATHER RESPIRADERO	1	1	1			
17	688–24378–00	PIPE, JOINT 3 TUBO DE UNION 3	1	1	1			
18	6P2–13547–00	HOSE 3 SELLO	1	1	1			
19	6P2–13548–10	HOSE, AIR 4 TUBO DE AIRE 4	1	1	1			
20	6P2–24376–00	PIPE, JOINT 1 TUBO DE UNION 1	1	1	1			
21	90464–18004	CLAMP BRIDA	1	1	1			
22	90464–18004	CLAMP BRIDA	2	2	2			

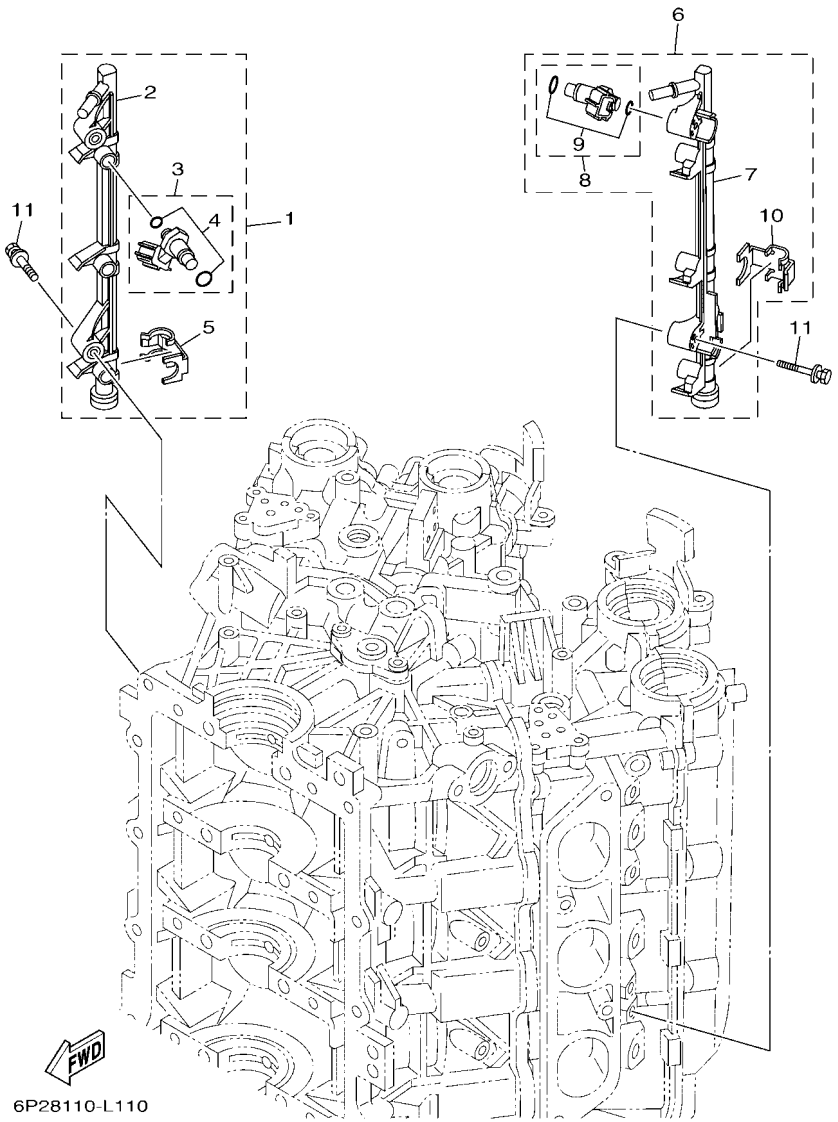

FIG. 12 THROTTLE BODY ASSY 3 — CAJA DE ACELERADOR COMPL 3

REF. NO.	PART NO. CODIGO Nº	DESCRIPTION DESCRIPCION	6S1M	CAR	6S2M			REMARKS OBSERVACIONES
1	6P2–13160–11	DELIVERY PIPE ASSY 1 TUBO DE LLEGADA CONJUNTO 1	1	1	1			
2	6P2–13161–00	.PIPE, DELIVERY 1 .TUBO CONDUCTOR 1	1	1	1			
3	6P2–13761–11	.INJECTOR .INYECTOR	3	3	3			
4	6C5–1410B–00	..PACKING KIT ..JUEGO DE EMPAQUE	1	1	1			
5	6P2–13577–00	.CLIP .PRESILLA	3	3	3			
6	6P2–13170–11	DELIVERY PIPE ASSY 2 TUBO DE LLEGADA CONJUNTO 2	1	1	1			
7	6P2–13171–00	.PIPE, DELIVERY 2 .TUBO CONDUCTOR 2	1	1	1			
8	6P2–13761–11	.INJECTOR .INYECTOR	3	3	3			
9	6C5–1410B–00	..PACKING KIT ..JUEGO DE EMPAQUE	1	1	1			
10	6P2–13577–00	.CLIP .PRESILLA	3	3	3			
11	90119–06296	BOLT, WITH WASHER TORNILLO CON ARANDELA	4	4	4			

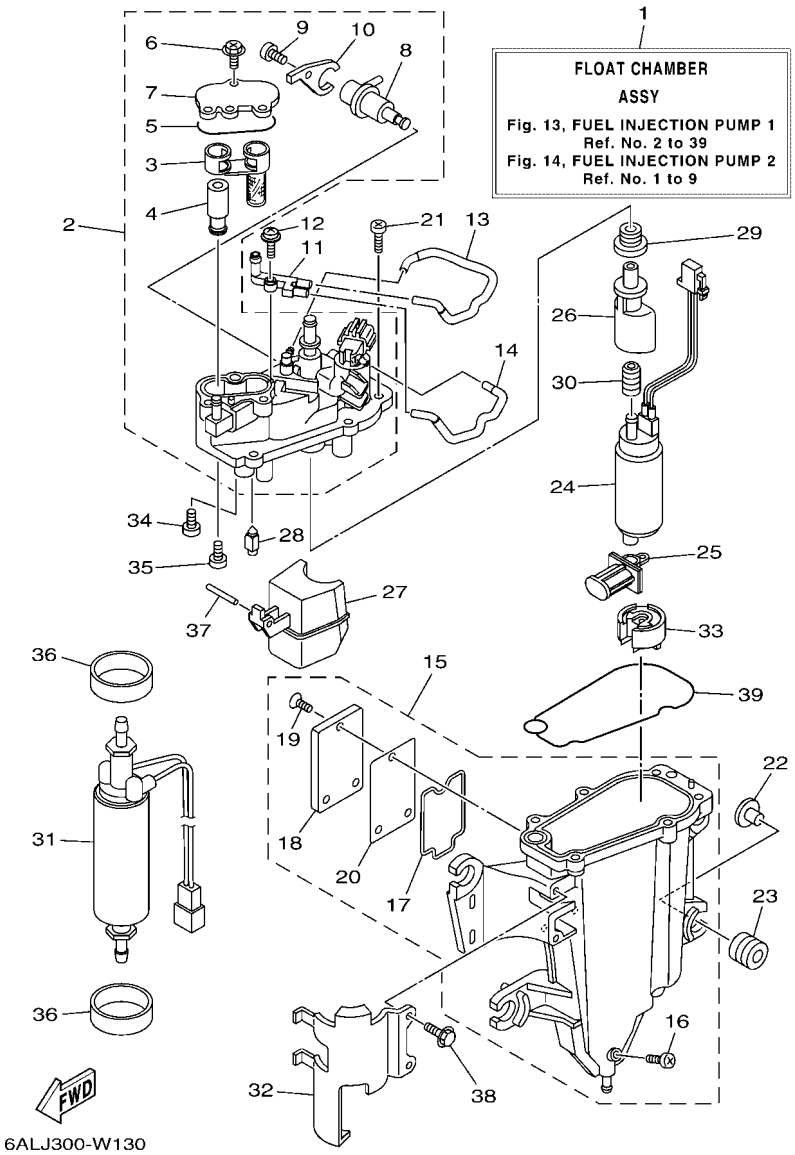

FIG. 13 FUEL INJECTION PUMP 1 — BOMBA DE INYECTOR 1

REF. NO.	PART NO. CODIGO Nº	DESCRIPTION DESCRIPCION	6S1M	CAR	6S2M			REMARKS OBSERVACIONES
1	6P2–14180–57	FLOAT CHAMBER ASSY CAMARA DE BOYA COMPLETE	1	1	1			EXCEPT FOR BRA EXCEPT FOR BRA
	6P2–14180–67	FLOAT CHAMBER ASSY CAMARA DE BOYA COMPLETE	1		1			FOR BRA FOR BRA
2	6AW–14182–11	COVER, FLOAT CHAMBER TAPA DE CAMARA DE BOIA	1	1	1			EXCEPT FOR BRA EXCEPT FOR BRA
	6AW–14182–21	COVER, FLOAT CHAMBER TAPA DE CAMARA DE BOIA	1		1			FOR BRA FOR BRA
3	6CB–24501–01	.FILTER, FUEL .FIELTRO	1	1	1			
4	6CB–24460–00	.RELIEF VALVE ASSY .VALVELA DE DESCOMPRESION	1	1	1			EXCEPT FOR BRA EXCEPT FOR BRA
	6CB–24460–10	.RELIEF VALVE ASSY .VALVELA DE DESCOMPRESION	1		1			FOR BRA FOR BRA
5	6CB–13016–00	.O-RING .ANILLO O	1	1	1			
6	6CB–14216–00	.SCREW .TORNILLO	3	3	3			
7	6CB–24217–00	.COVER .CUBIERTA	1	1	1			EXCEPT FOR BRA EXCEPT FOR BRA
	6CB–24217–10	.COVER .CUBIERTA	1		1			FOR BRA FOR BRA
8	6CB–13906–01	.REGULATOR, PRESSURE .REGULADOR	1	1	1			
9	6CB–14564–00	.SCREW .TORNILLO	1	1	1			
10	6CB–14146–00	.PLATE .PLACA SOPORTE	1	1	1			
11	68V–24379–10	PIPE, JOINT 4 TUBO DE UNION 4	1	1	1			
12	68V–14216–00	SCREW TORNILLO	1	1	1			
13	68V–1475H–00	PIPE 5 TUBO 5	1	1	1			
14	68V–1475J–00	PIPE 6 TUBO 6	1	1	1			
15	6AW–14181–11	BODY, FLOAT CHAMBER 1 CUERPO DE CAMARA DE BOIA	1	1	1			
16	6P2–14191–00	.PLUG, DRAIN .TORNILLO, DE DRENAJE	1	1	1			
17	6CB–14239–00	.SEAL .SELLO	1	1	1			
18	6CB–24452–10	.COVER .CUBIERTA	1	1	1			
19	6CB–14429–01	.SCREW .TORNILLO	3	3	3			
20	6CB–24482–00	.GASKET 1 .EMPAQUE 1	1	1	1			
21	63P–14567–00	SCREW TORNILLO	6	6	6			
22	63P–13716–00	COLLAR COLLAR	4	4	4			
23	6CB–13593–00	DAMPER COJINETE DE RODILLOS	4	4	4			

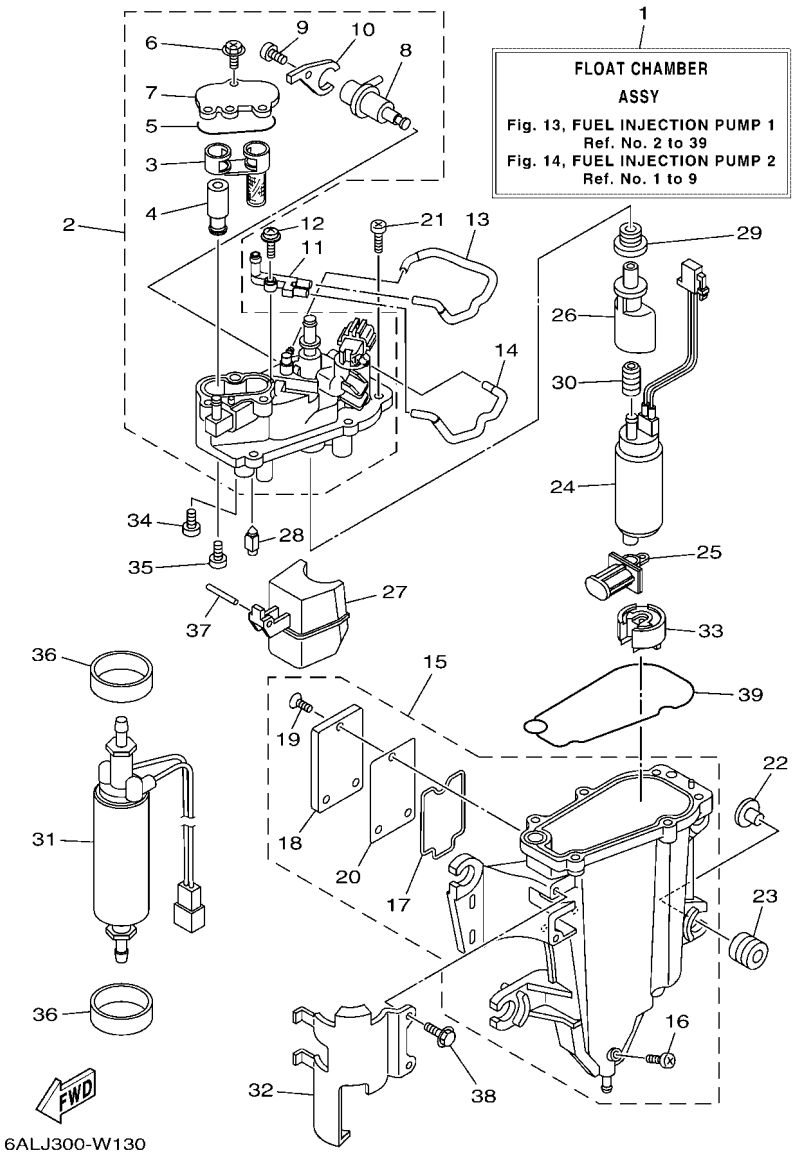

FIG. 13 FUEL INJECTION PUMP 1 — BOMBA DE INYECTOR 1

REF. NO.	PART NO. CODIGO Nº	DESCRIPTION DESCRIPCION	6S1M	CAR	6S2M			REMARKS OBSERVACIONES
24	6P2–13907–22	FUEL PUMP COMP. BOMBA DE COMBUSTIBLE COMPLETA	1	1	1			EXCEPT FOR BRA EXCEPT FOR BRA
	6P2–13907–32	FUEL PUMP COMP. BOMBA DE COMBUSTIBLE COMPLETA	1		1			FOR BRA FOR BRA
25	63P–13915–00	FILTER FILTRO	1	1	1			
26	6KA–13132–00	JOINT JUNTA	1	1	1			
27	6CB–14985–00	FLOAT BOIA	1	1	1			
28	6CB–14546–00	VALVE, NEEDLE VALVULA DE AGUJA	1	1	1			
29	6LH–1447B–00	BUSH 1 BUJE 1	1	1	1			
30	6AW–13781–00	DAMPER, PUMP AMORTIGUADOR DE BOMBA	1	1	1			
31	6GR–24410–02	FUEL PUMP ASSY BOMBA DE COMBUSTIBLE COMPLETA	1	1	1			
32	6AW–24491–10	BRACKET, FUEL PUMP SOPORTE BOMBA COMBUSTIBLE	1	1	1			
33	6AW–13784–00	COVER, PUMP CUBIERTA DE BOMBA	1	1	1			
34	4SV–24453–00	SCREW TORNILLO	1	1	1			EXCEPT FOR BRA EXCEPT FOR BRA
	69J–24453–00	SCREW TORNILLO	1		1			FOR BRA FOR BRA
35	98507–04008	SCREW, PAN HEAD TORNILLO DE CABEZA CON PLANA	1	1	1			EXCEPT FOR BRA EXCEPT FOR BRA
	68V–14592–10	SCREW TORNILLO	1		1			FOR BRA FOR BRA
36	6CB–24492–00	BUSH, FUEL PUMP BUJE	2	2	2			
37	6P2–14386–00	PIN, FLOAT PASADOR DE BOIA	1	1	1			
38	6CB–24592–00	BOLT TORNILLO	2	2	2			
39	6CB–14984–00	GASKET, FLOAT CHAMBER EMPAQUE CAMARA DE BOIA	1	1	1			

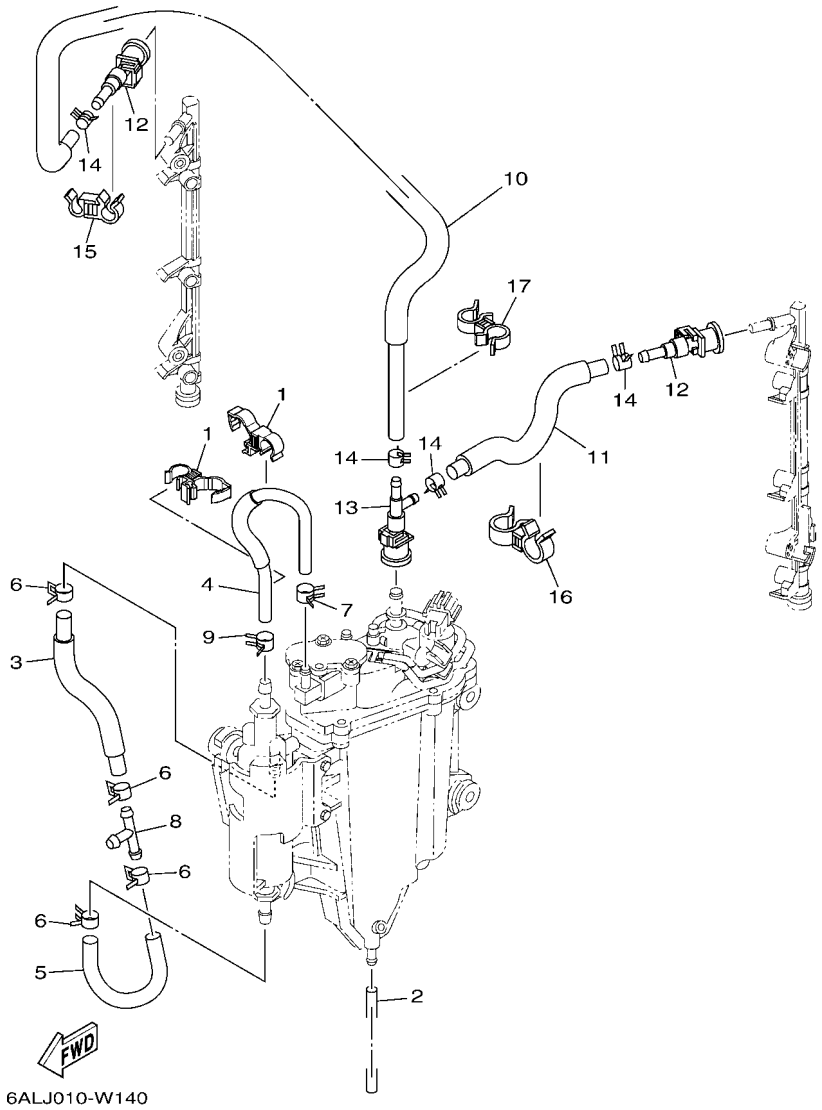

FIG. 14 FUEL INJECTION PUMP 2 — BOMBA DE INYECTOR 2

REF. NO.	PART NO. CODIGO Nº	DESCRIPTION DESCRIPCION	6S1M	CAR	6S2M			REMARKS OBSERVACIONES
1	90464–12012	CLAMP BRIDA	2	2	2			
2	6P2–14149–00	PIPE TUBO	1	1	1			
3	6AW–24323–20	PIPE 12 TUBO 12	1	1	1			
4	6AW–24324–30	PIPE 13 TUBO 13	1	1	1			
5	6AW–24317–20	PIPE 7 TUBO 7	1	1	1			
6	90467–141A2	CLIP PRESILLA	4	4	4			
7	68V–13577–01	CLIP PRESILLA	1	1	1			
8	6E5–24378–00	PIPE, JOINT 3 TUBO DE UNION 3	1	1	1			
9	90467–140A9	CLIP PRESILLA	1	1	1			
10	6P2–13973–30	PIPE, FUEL 3 TUBO, COMBUSTIBLE 3	1	1	1			
11	6P2–13974–30	PIPE, FUEL 4 TUBO, COMBUSTIBLE 4	1	1	1			
12	6AW–24300–11	FUEL PIPE JOINT CONECTOR MANGUERA COMBUSTIBLE	2	2	2			
13	6P2–24300–01	FUEL PIPE JOINT CONECTOR MANGUERA COMBUSTIBLE	1	1	1			
14	68V–13577–01	CLIP PRESILLA	4	4	4			
15	90464–12010	CLAMP BRIDA	1	1	1			
16	90464–18005	CLAMP BRIDA	1	1	1			
17	90464–12009	CLAMP BRIDA	1	1	1			

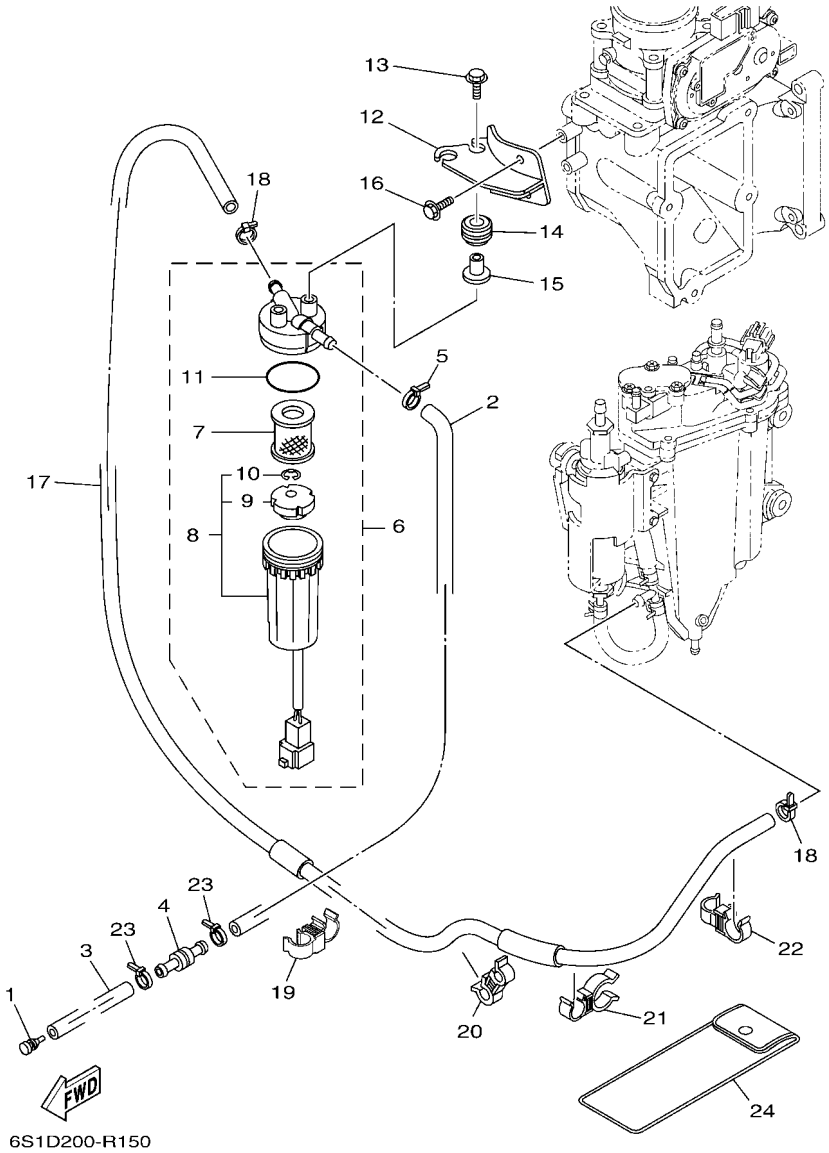

FIG. 15 FUEL 1 — COMBUSTIBLE 1

REF. NO.	PART NO. CODIGO Nº	DESCRIPTION DESCRIPCION	6S1M	CAR	6S2M			REMARKS OBSERVACIONES
1	689–85547–01	DAMPER AMORTIGUADOR	1	1	1			
2	6P2–24314–00	PIPE 4 TUBO 4	1	1	1			
3	90445–13511	HOSE (L2000) TUBO (L2000)	1	1	1			
4	6R3–24377–10	PIPE, JOINT 2 TUBO DE UNION 2	1	1	1			
5	90465–11M10	CLAMP BRIDA	1	1	1			
6	6P3–24560–04	FILTER ASSY FILTRO COMPLETO	1	1	1			
7	6P3–24563–02	.ELEMENT, FILTER .ELEMENTO DEL FILTRO	1	1	1			
8	6P3–24562–03	.CUP, FILTER .COPA DE FILTRO	1	1	1			
9	6P3–24469–00	..FLOAT, WATER LEVEL ..BOIA	1	1	1			
10	6P3–24519–00	..CLIP ..PRESILLA	1	1	1			
11	6P3–24564–00	.GASKET .EMPAQUE	1	1	1			
12	6P2–24566–11	BRACKET, FILTER SOPORTE DEL FILTRO	1	1	1			
13	90119–06309	BOLT, WITH WASHER TORNILLO CON ARANDELA	2	2	2			
14	90480–14018	GROMMET TAPON	2	2	2			
15	90387–06289	COLLAR ESPACIADOR	2	2	2			
16	97E95–06514	BOLT, HEXAGON W/W DEEP RECESS TORNILLO HEXAGONAL CON RONDONA	2	2	2			
17	6P2–24313–50	PIPE 3 TUBO 3	1	1	1			
18	90465–11M10	CLAMP BRIDA	2	2	2			
19	90464–12009	CLAMP BRIDA	1	1	1			
20	90464–12010	CLAMP BRIDA	1	1	1			
21	90464–20024	CLAMP BRIDA	1	1	1			
22	90464–12009	CLAMP BRIDA	1	1	1			
23	90465–11M10	CLAMP BRIDA	2	2	2			
24	67F–28100–12	TOOL KIT JUEGO DE HERRAMIENTAS	1		1			UR UR
	69J–28100–03	TOOL KIT JUEGO DE HERRAMIENTAS	1	1	1			UR UR

FIG. 16 FUEL 2 — COMBUSTIBLE 2

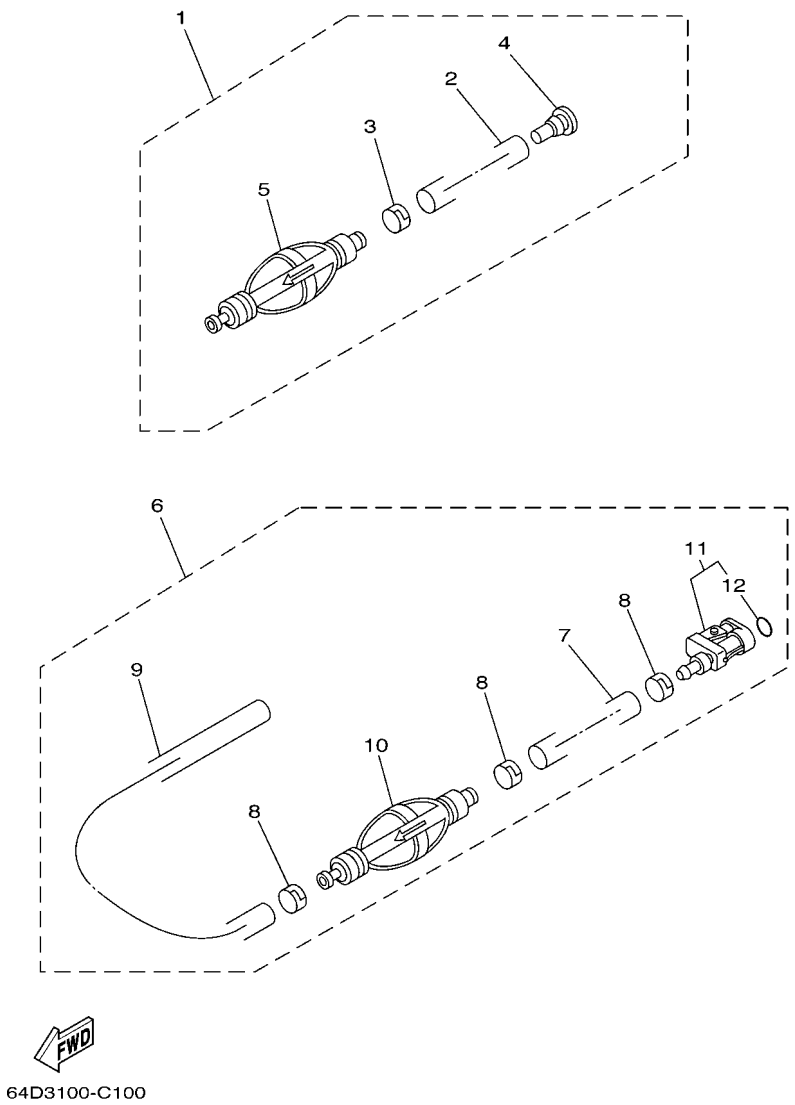

REF. NO.	PART NO. CODIGO Nº	DESCRIPTION DESCRIPCION	6S1M	CAR	6S2M			REMARKS OBSERVACIONES
1	6Y2–24307–52	FUEL PIPE COMP. 2 MANGUERA COMPL,COMBUSTIBLE 2	1	1	1			AP 6S1-EXCEPT FOR CHN AP 6S1-EXCEPT FOR CHN
2	90445–13M25	.HOSE (L2050) .MANGUERA (L2050)	1	1	1			
3	6E5–24351–51	.BAND 1 .ABRAZADERA 1	1	1	1			
4	90480–06M19	.GROMMET .TAPON	1	1	1			
5	6Y2–24360–60	.PRIMER PUMP ASSY .SOPORTE BOMBA	1	1	1			
6	6Y2–24306–46	FUEL PIPE COMP. 1 TUBO COMBUST. COMPL 1	1					AP FOR CHN AP FOR CHN
7	90445–13M25	.HOSE (L2050) .MANGUERA (L2050)	1					
8	6E5–24351–51	.BAND 1 .ABRAZADERA 1	3					
9	90445–13M26	.HOSE (L250) .MANGUERA (L250)	1					
10	6Y2–24360–60	.PRIMER PUMP ASSY .SOPORTE BOMBA	1					
11	6Y2–24305–06	.FUEL PIPE JOINT COMP. 2 .CONECTOR MANGUERA COMBUST. 2	1					
12	93210–08287	..O-RING ..ANILLO O	1					

FIG. 17 GENERATOR — GENERADOR

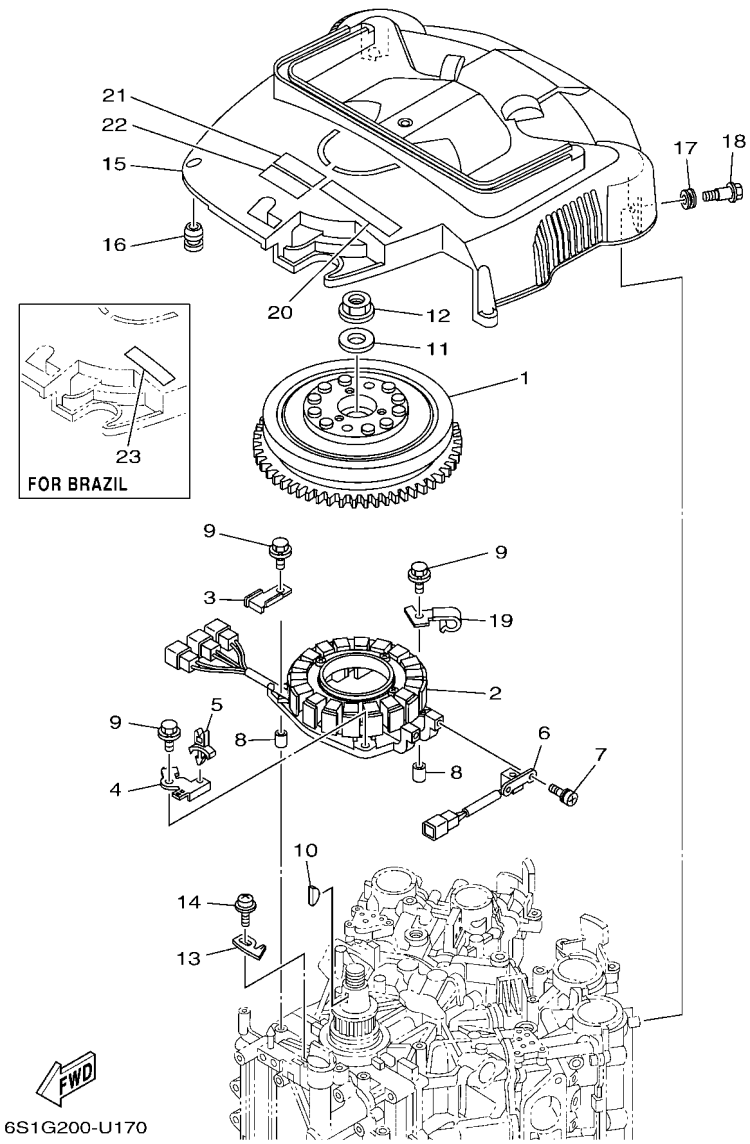

REF. NO.	PART NO. CODIGO Nº	DESCRIPTION DESCRIPCION	6S1M	CAR	6S2M			REMARKS OBSERVACIONES
1	6P2–81450–00	ROTOR ASSY ROTOR COMPLETO	1	1	1			
2	6P2–81460–00	BASE ASSY CONJUNTO BASE	1	1	1			
3	6P2–81443–00	CLAMP, LEAD 1 GRAMPA DE CABLE 1	1	1	1			
4	6P2–8257V–00	PLATE, CONNECTOR PLACA DE CONECTOR	1	1	1			
5	90464–06001	CLAMP BRIDA	1	1	1			
6	6P2–85580–00	COIL, PULSER BOBINA DE PULSACION	1	1	1			
7	97980–05312	SCREW, WITH WASHER TORNILLO, CON ARANDELA	2	2	2			
8	99530–08012	PIN, DOWEL PASADOR, DE ESPIGA	2	2	2			
9	97E95–06635	BOLT, HEXAGON W/W DEEP RECESS TORNILLO HEXAGONAL CON RONDONA	4	4	4			
10	90280–05015	KEY, WOODRUFF CUNA WOODRUFF	1	1	1			
11	90201–24014	WASHER, PLATE ARANDELA PLANA	1	1	1			
12	90179–24002	NUT TUERCA	1	1	1			
13	6P2–81332–00	PLATE, TIMING PLACA REGULADOR DE TIEMPO	1	1	1			
14	97985–06210	SCREW, WITH WASHER TORNILLO, CON ARANDELA	1	1	1			
15	6P2–81337–02	COVER, FLYWHEEL CUBIERTA DE VOLANTE	1	1	1			
16	663–82317–02	DAMPER, IGNITION COIL AMORTIGUADOR BOBINA ENCENDIDO	4	4	4			
17	90480–12314	GROMMET TAPON	2	2	2			
18	90109–06MA1	BOLT PERNO	2	2	2			
19	6P2–81128–00	CLAMP GRAMPA	1	1	1			
20	60L–13437–63	MARK, CAUTION MARKER	1	1	1			EXCEPT FOR BRA EXCEPT FOR BRA
21	6EE–81994–41	LABEL, SAFETY ETIQUETA DE SEGURIDAD	1	1	1			EXCEPT FOR BRA EXCEPT FOR BRA
22	6EE–81994–51	LABEL, SAFETY ETIQUETA DE SEGURIDAD	1	1	1			FOR CAR,AFR FOR CAR,AFR
23	6EE–81994–70	LABEL, SAFETY ETIQUETA DE SEGURIDAD	1		1			FOR BRA FOR BRA

FIG. 18 ELECTRICAL 1 — EQUIPO ELECTRICO 1

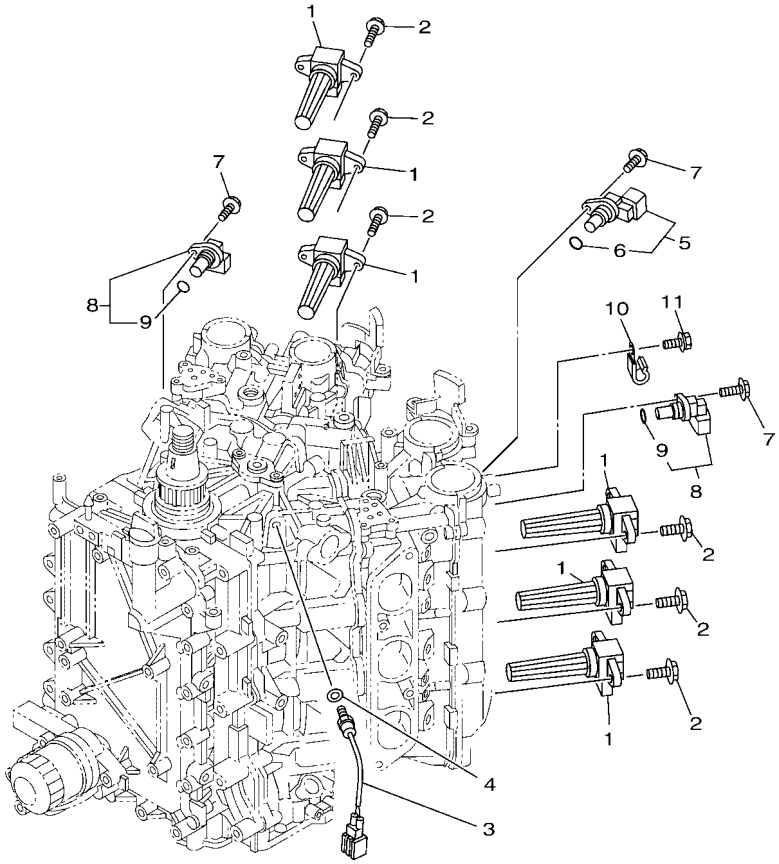

6ALD100-R180

REF. NO.	PART NO. CODIGO Nº	DESCRIPTION DESCRIPCION	6S1M	CAR	6S2M			REMARKS OBSERVACIONES
1	6P2–82310–03	IGNITION COIL ASSY BOBINA DE ENCENDIDO COMPLETA	6	6	6			
2	97E95–06520	BOLT, HEXAGON W/W DEEP RECESS TORNILLO HEXAGONAL CON RONDONA	12	12	12			
3	61A–85790–01	THERMOSENSOR ASSY TERMICA SENSORIO	1	1	1			
4	92990–10600	WASHER, PLATE ARANDELA PLANA	1	1	1			
5	6P2–85896–00	SENSOR, CAM POSITION SENSOR DE LEVA	1	1	1			
6	6P2–85075–00	.O-RING .ANILLO-O	1	1	1			
7	97E95–06520	BOLT, HEXAGON W/W DEEP RECESS TORNILLO HEXAGONAL CON RONDONA	3	3	3			
8	6P2–85897–00	SENSOR, CAM POSITION 2 SENSOR DE LEVA 2	2	2	2			
9	6P2–85075–00	.O-RING .ANILLO-O	1	1	1			
10	90462–08032	CLAMP BRIDA	1	1	1			
11	97E95–06512	BOLT, HEXAGON W/W DEEP RECESS TORNILLO HEXAGONAL CON RONDONA	1	1	1			

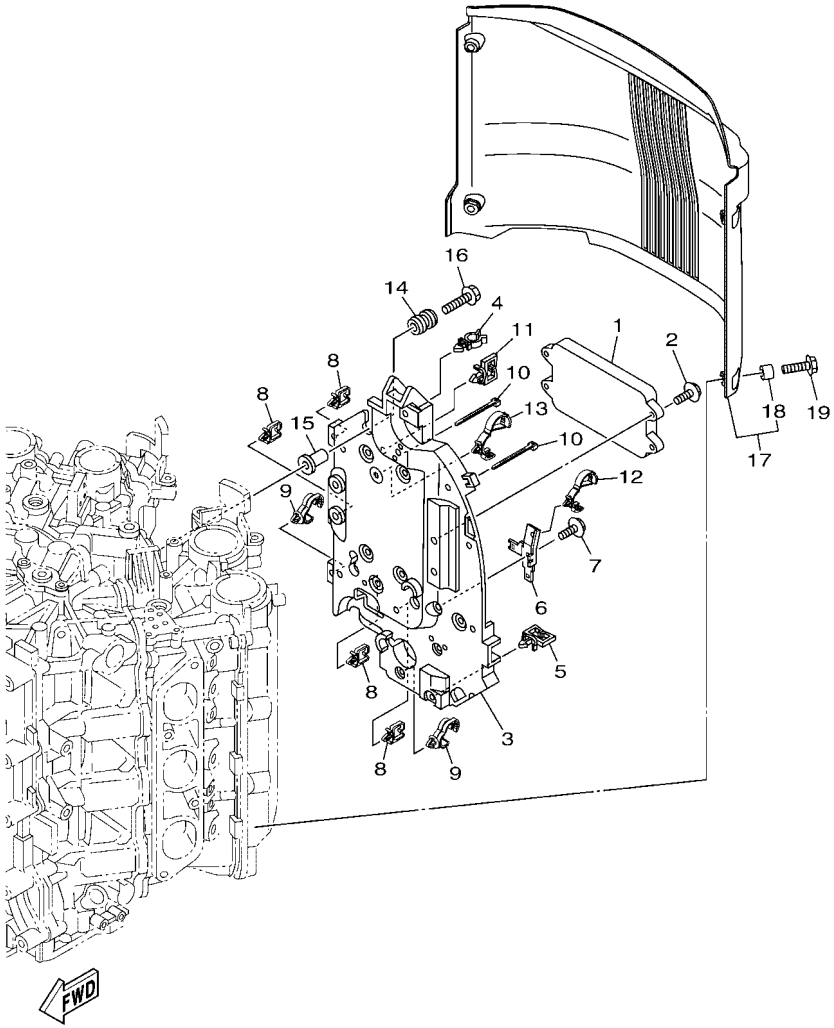

6ALG300-U190

FIG. 19 ELECTRICAL 2 — EQUIPO ELECTRICO 2

REF. NO.	PART NO. CODIGO Nº	DESCRIPTION DESCRIPCION	6S1M	CAR	6S2M			REMARKS OBSERVACIONES
1	6S1–8591A–43	ENGINE CONTROL UNIT ASSY UNIDAD CONTROL	1	1	1			EXCEPT FOR BRA EXCEPT FOR BRA
	6S1–8591A–53	ENGINE CONTROL UNIT ASSY UNIDAD CONTROL	1		1			FOR BRA FOR BRA
2	97E95–06520	BOLT, HEXAGON W/W DEEP RECESS TORNILLO HEXAGONAL CON RONDONA	4	4	4			
3	6P2–82316–01	BRACKET, IGNITION COIL SOPORTE BOBINA ENCENDIDO	1	1	1			
4	90464–19M45	CLAMP BRIDA	1	1	1			
5	90464–23199	CLAMP BRIDA	1	1	1			
6	6P2–81845–10	PLATE PLACA	1	1	1			
7	97E95–06516	BOLT, HEXAGON W/W DEEP RECESS TORNILLO HEXAGONAL CON RONDONA	1	1	1			
8	90464–08004	CLAMP BRIDA	4	4	4			
9	90464–13249	CLAMP BRIDA	2	2	2			
10	90465–14M66	CLAMP BRIDA	2	2	2			
11	90464–23199	CLAMP BRIDA	1	1	1			
12	90464–12183	CLAMP BRIDA	1	1	1			
13	90464–12183	CLAMP BRIDA	1	1	1			
14	6A0–82317–01	DAMPER, IGNITION COIL AMORTIGUADOR BOBINA ENCENDIDO	4	4	4			
15	90387–06119	COLLAR ESPACIADOR	4	4	4			
16	90119–06289	BOLT, WITH WASHER TORNILLO CON ARANDELA	4	4	4			
17	6P2–82314–21	COVER, IGNITION COIL CUBIERTA BOBINA ENCENDIDO	1	1	1			
18	90387–06044	.COLLAR .ESPACIADOR	4	4	4			
19	90119–06M92	BOLT, WITH WASHER TORNILLO CON ARANDELA	4	4	4			

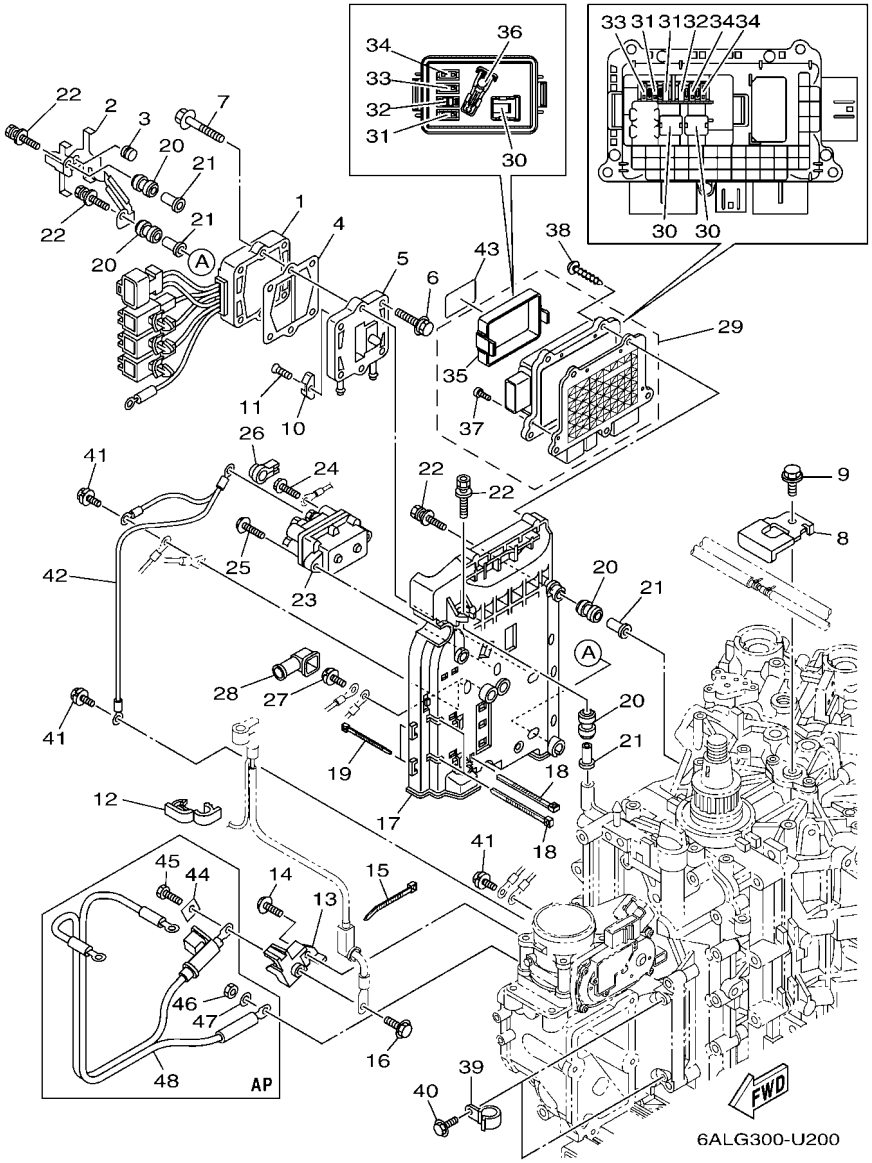

FIG. 20 ELECTRICAL 3 — EQUIPO ELECTRICO 3

REF. NO.	PART NO. CODIGO Nº	DESCRIPTION DESCRIPCION	6S1M	CAR	6S2M			REMARKS OBSERVACIONES
1	6P2–81960–12	RECTIFIER & REGULATOR ASSY RECTIFICADOR Y REGULADOR	1	1	1			
2	6P2–81614–10	PROTECTOR PROTECTOR	1	1	1			
3	2D1–14737–01	DAMPER, MUFFLER AMORTIGUADOR DE SILENCIADOR	1	1	1			
4	60V–81975–A0	PLATE, RECTIFIER FITTING PLACA ACCESORIA RECTIF.	1	1	1			
5	6P2–81972–00–9S	COVER, RECTIFIER CUBIERTA DE RECTIFICADOR	1	1	1			
6	90119–06MA3	BOLT, WITH WASHER TORNILLO CON ARANDELA	4	4	4			
7	90119–06MA5	BOLT, WITH WASHER TORNILLO CON ARANDELA	2	2	2			
8	6P2–12491–00	CLAMP 1 GRAMPA 1	1	1	1			
9	97E95–06512	BOLT, HEXAGON W/W DEEP RECESS TORNILLO HEXAGONAL CON RONDONA	1	1	1			
10	6E5–11325–00	ANODE ANODO	1	1	1			
11	98780–04015	SCREW, FLAT HEAD TORNILLO, CABEZA PLANA	1	1	1			
12	90464–18004	CLAMP BRIDA	5	5	5			
13	6P2–81925–01	TERMINAL TERMINAL	1	1	1			
14	97E95–08520	BOLT, HEXAGON W/W DEEP RECESS TORNILLO HEXAGONAL CON RONDONA	1	1	1			
15	90465–11M52	CLAMP BRIDA	1	1	1			
16	97E95–08516	BOLT, HEXAGON W/W DEEP RECESS TORNILLO HEXAGONAL CON RONDONA	1	1	1			
17	6P2–81948–10	BRACKET SOPORTE	1	1	1			
18	90465–11M52	CLAMP BRIDA	4	4	4			
19	90465–14M66	CLAMP BRIDA	2	2	2			
20	6A0–82317–01	DAMPER, IGNITION COIL AMORTIGUADOR BOBINA ENCENDIDO	6	6	6			
21	90387–06119	COLLAR ESPACIADOR	6	6	6			
22	90119–06294	BOLT, WITH WASHER TORNILLO CON ARANDELA	6	6	6			
23	63P–W8195–00	RELAY ASSY RELE COMPLETO	1	1	1			
24	97E95–06610	BOLT, HEXAGON W/W DEEP RECESS TORNILLO HEXAGONAL CON RONDONA	2	2	2			
25	97513–06525	BOLT, WITH WASHER PERNO CON ARANDELA	2	2	2			
26	6P2–8183X–00	CAP, TERMINAL CUBIERTA DE TERMINAL	2	2	2			
27	97E95–06616	BOLT, HEXAGON W/W DEEP RECESS TORNILLO HEXAGONAL CON RONDONA	1	1	1			

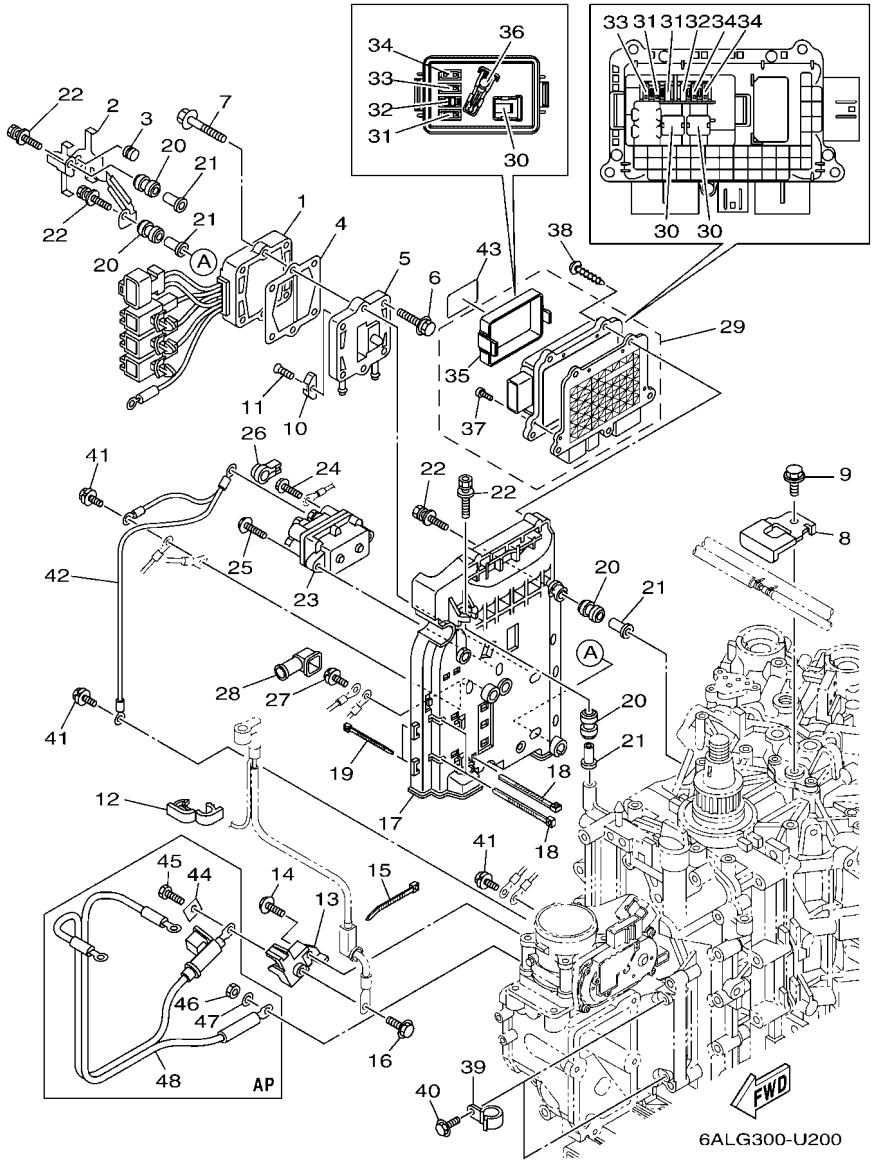

FIG. 20 ELECTRICAL 3 — EQUIPO ELECTRICO 3

REF. NO.	PART NO. CODIGO Nº	DESCRIPTION DESCRIPCION	6S1M	CAR	6S2M			REMARKS OBSERVACIONES
28	6P2–82119–00	COVER, LEAD WIRE CUBIERTA DE CABLE CONDUCTOR	1	1	1			
29	6DA–82170–12	FUSE BOX ASSY CAJA DE FUSIBLES COMPL.	1	1	1			
30	6CB–82151–41	.FUSE (60A) .FUSIBLE (60A)	3	3	3			
31	6CB–82151–00	.FUSE (10A) .FUSIBLE (10A)	3	3	3			
32	6CB–82151–10	.FUSE (15A) .FUSIBLE (15A)	2	2	2			
33	6CB–82151–20	.FUSE (20A) .FUSIBLE (20A)	2	2	2			
34	6CB–82151–30	.FUSE (30A) .FUSIBLE (30A)	3	3	3			
35	6CB–85544–10	.COVER .CUBIERTA	1	1	1			
36	6CB–2812A–00	.PULLER, FUSE .TIRADOR DE FUSIBLE	1	1	1			
37	6P2–82113–00	.SCREW (M3) .TORNILLO (M3)	5	5	5			
38	97780–50620	SCREW, TAPPING TORNILLO DE CABEZA DE CONO ACH	4	4	4			
39	90462–08026	CLAMP BRIDA	2	2	2			
40	97E95–06516	BOLT, HEXAGON W/W DEEP RECESS TORNILLO HEXAGONAL CON RONDONA	2	2	2			
41	97E95–06616	BOLT, HEXAGON W/W DEEP RECESS TORNILLO HEXAGONAL CON RONDONA	3	3	3			
42	6P2–8259M–10	WIRE HARNESS ASSY 2 ARNES DE CABLES	1	1	1			
43	6DA–81919–11	GRAPHIC, REGULATOR CALCAMONIA DE REGULADOR	1	1	1			
44	6P2–81923–00	WASHER ARANDELA	1	1	1			AP AP
45	97D95–08016	BOLT, HEXAGON DEEP RECESS TORNILLO HEXAGONAL	1	1	1			AP AP
46	95333–08600	NUT TUERCA	1	1	1			AP AP
47	92903–08100	WASHER, SPRING RONDANA SENCILLA	1	1	1			AP AP
48	6P2–82105–03	BATTERY CABLE CABLE DE BATERIA	1	1	1			AP AP

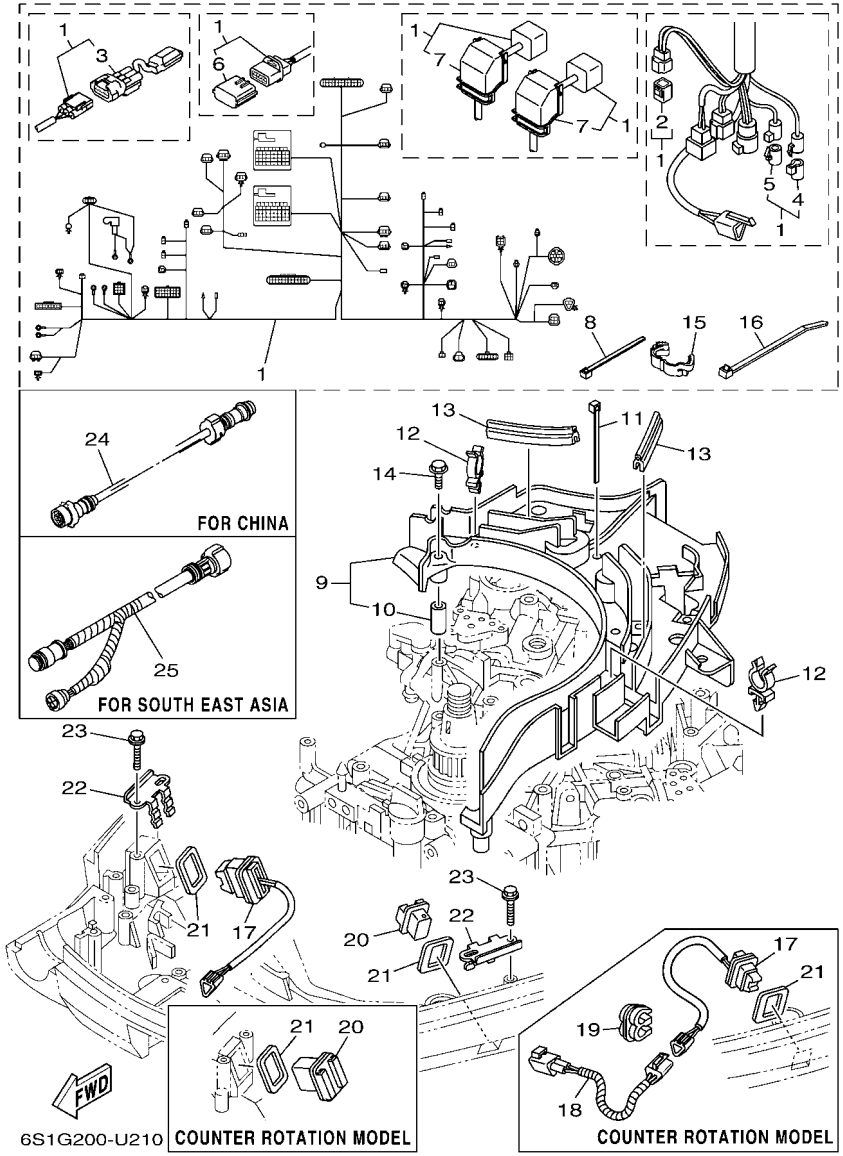

FIG. 21 ELECTRICAL 4 — EQUIPO ELECTRICO 4

REF. NO.	PART NO. CODIGO Nº	DESCRIPTION DESCRIPCION	6S1M	CAR	6S2M			REMARKS OBSERVACIONES
1	6P2–82590–72	WIRE HARNESS ASSY CONJUNTO DE CABLES	1	1	1			
2	6Y8–82582–11	.CAP 1 (4PIN) .TAPA 1 (4P)	1	1	1			
3	6FM–81980–01	.DIODE ASSY .CONJUNTO DIODO	1	1	1			
4	6DA–82582–00	.CAP 1 (FEMALE) .TAPA 1	1	1	1			
5	6DA–82582–10	.CAP 1 (MALE) .TAPA 1	1	1	1			
6	6AW–82582–00	.CAP 1 .TAPA 1	2	2	2			
7	6EM–82599–00	.COVER, CONNECTOR .CUBIERTA DE CONECTOR	2	2	2			
8	90465–14M66	CLAMP BRIDA	4	4	4			
9	6P2–82589–10	PROTECTER, WIRE HARNESS PROTECTOR DE ARNES DE CABLE	1	1	1			
10	90387–06M26	.COLLAR .ESPACIADOR	5	5	5			
11	90465–14M66	CLAMP BRIDA	2	2	2			
12	90464–19M45	CLAMP BRIDA	4	4	4			
13	6P2–85722–00	INSULATOR AISLANTE	2	2	2			
14	97E95–06535	BOLT, HEXAGON W/W DEEP RECESS TORNILLO HEXAGONAL CON RONDONA	5	5	5			
15	90464–14010	CLAMP BRIDA	1	1	1			
16	90465–13M18	CLAMP BRIDA	3	3	3			
17	69J–82563–01	TRIM & TILT SWITCH ASSY INTERRUPTOR DE INCLINACION	1	1	1			
18	6P3–82553–00	EXTENSION, WIRE LEAD CABLE			1			
19	90464–10M57	CLAMP BRIDA			1			
20	69J–42723–01	COVER, BOTTOM CUBIERTA INFERIOR	1	1	1			
21	69J–82587–01	GASKET EMPAQUETADURA	2	2	2			
22	69J–83614–10	BRACKET SOPORTE	2	2	2			
23	90109–06M86	BOLT PERNO	4	4	4			
24	688–8258A–30	EXTENSION, WIRE HARNESS (3M) EXTENSION, ARNES DE CABLES (3M	1					AP FOR CHN (10P) AP FOR CHN (10P)
25	6K1–8258A–41	EXTENSION, WIRE HARNESS (8M) EXTENSION, ARNES DE CABLES (8M	1					AP FOR OTH (10P) AP FOR OTH (10P)

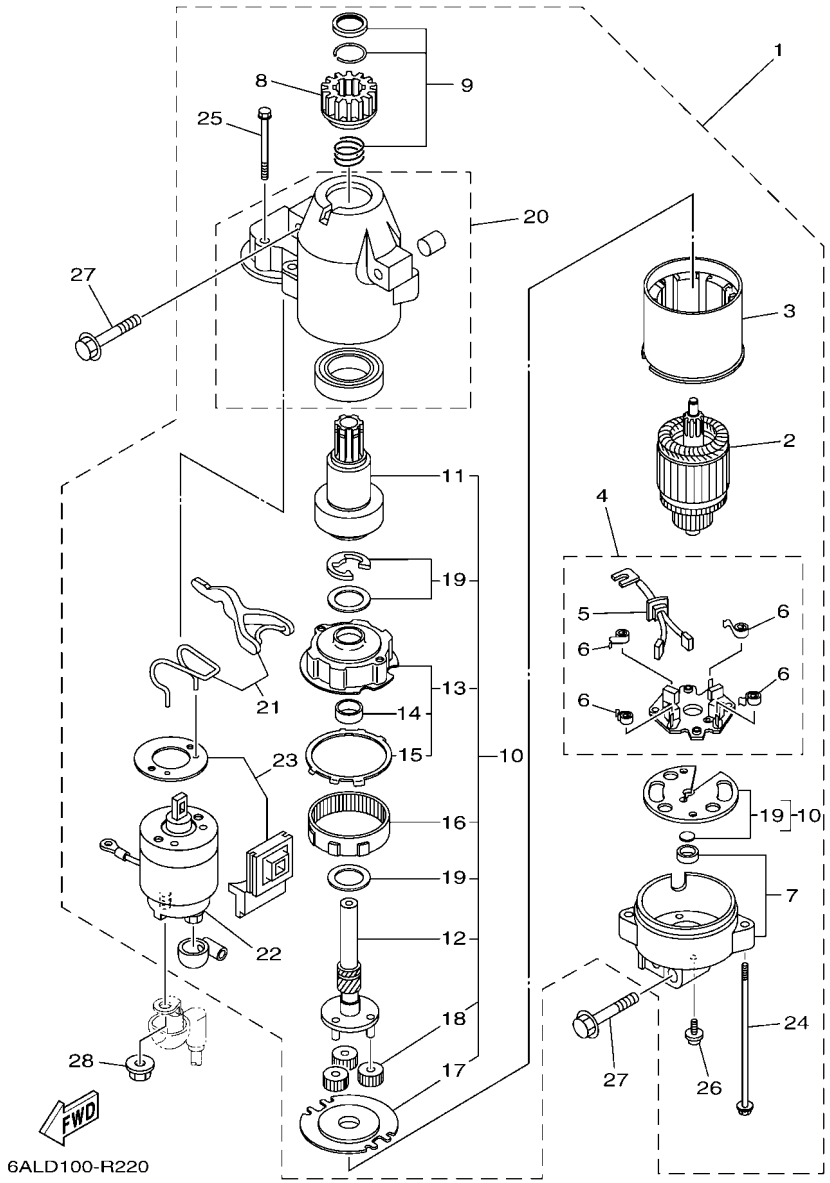

FIG. 22 STARTING MOTOR — MOTOR DE ARRANQUE

REF. NO.	PART NO. CODIGO Nº	DESCRIPTION DESCRIPCION	6S1M	CAR	6S2M			REMARKS OBSERVACIONES
1	6BR–81800–02	STARTING MOTOR ASSY MOTOR DE ARRANQUE COMPLETO	1	1	1			
2	67F–81850–00	.ARMATURE ASSY .INDUCIDO COMPLETO	1	1	1			
3	67F–81810–00	.STATOR ASSY .ESTATOR COMPLETO	1	1	1			
4	69J–81840–11	.BRUSH HOLDER ASSY .SOSTEN DE ESCOBILLA COMPLETO	1	1	1			
5	69J–81801–11	..BRUSH SET ..JUEGO DE ESCOBILLA	1	1	1			
6	67F–81813–00	..SPRING, BRUSH ..RESORTE DE ESCOBILLA	4	4	4			
7	67F–81820–00	.REAR BRACKET ASSY .CUBIERTA TRASERA COMPL	1	1	1			
8	67F–81808–00	.PINION ASSY .PINON	1	1	1			
9	67F–81857–00	.PINION STOPPER SET .JUEGO TAPON PINON	1	1	1			
10	67F–81807–00	.GEAR ASSY, STARTING MOTOR .PINON CONJUNTO	1	1	1			
11	67F–81832–00	..CLUTCH, OVER RUN ..PINON COMPL	1	1	1			
12	67F–81836–00	..SHAFT, PINION ..ARBOL, PINON	1	1	1			
13	67F–81821–00	..BRACKET, CENTER 1 ..SOPORTE, CENTRO 1	1	1	1			
14	67F–81841–00	...BEARING ...PORTADOR	1	1	1			
15	67F–8183R–00	...GASKET ...EMPAQUETADURA	1	1	1			
16	67F–81891–00	..GEAR, RING ..ENGRANAJE ANILLO	1	1	1			WITH 67F-8183R-00 WITH 67F-8183R-00
17	67F–81830–00	..BRACKET, CENTER 2 ..SOPORTE, CENTRO 2	1	1	1			
18	60V–8183T–00	..GEAR, IDLER ..ENGRENAJE NEUTRO	3	3	3			
19	67F–81809–00	..WASHER KIT ..JUEGO DE ARANDELA	1	1	1			
20	69J–81842–00	.COVER .TAPA	1	1	1			
21	6C5–81839–00	.LEVER ASSY .PALANCA COMPL.	1	1	1			
22	63P–81941–00	.STARTER RELAY ASSY .RELE DE ARRANQUE	1	1	1			
23	6C5–81869–00	.COVER, DUST .CUBIERTA PARA POLVO	1	1	1			
24	6K7–81826–11	.BOLT .PERNO	2	2	2			
25	69J–81828–00	.BOLT 2 .TORNILLO DE EMPUJE 2	2	2	2			
26	67F–81846–00	.SCREW .TORNILLO	2	2	2			
27	97513–08545	BOLT, WITH WASHER PERNO CON ARANDELA	3	3	3			

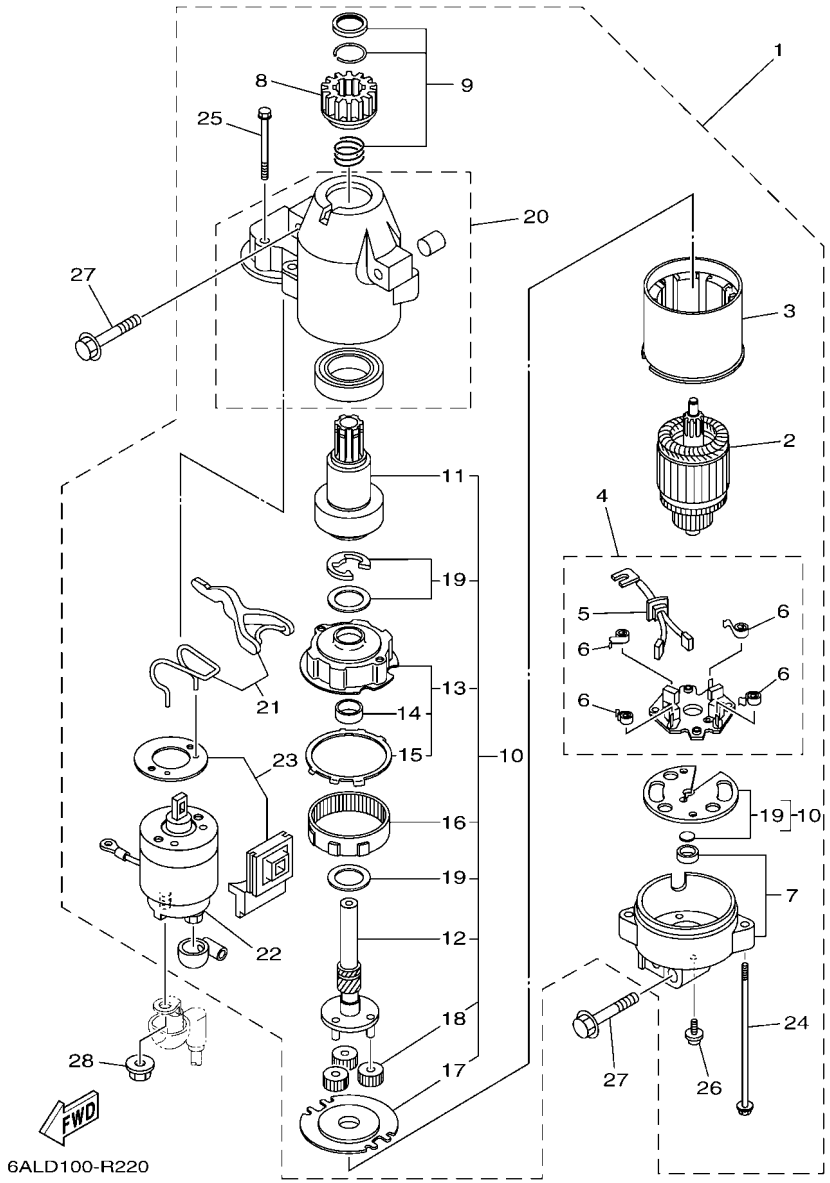

FIG. 22 STARTING MOTOR — MOTOR DE ARRANQUE

REF. NO.	PART NO. CODIGO Nº	DESCRIPTION DESCRIPCION	6S1M	CAR	6S2M			REMARKS OBSERVACIONES
28	90179–08003	NUT TUERCA	1	1	1			

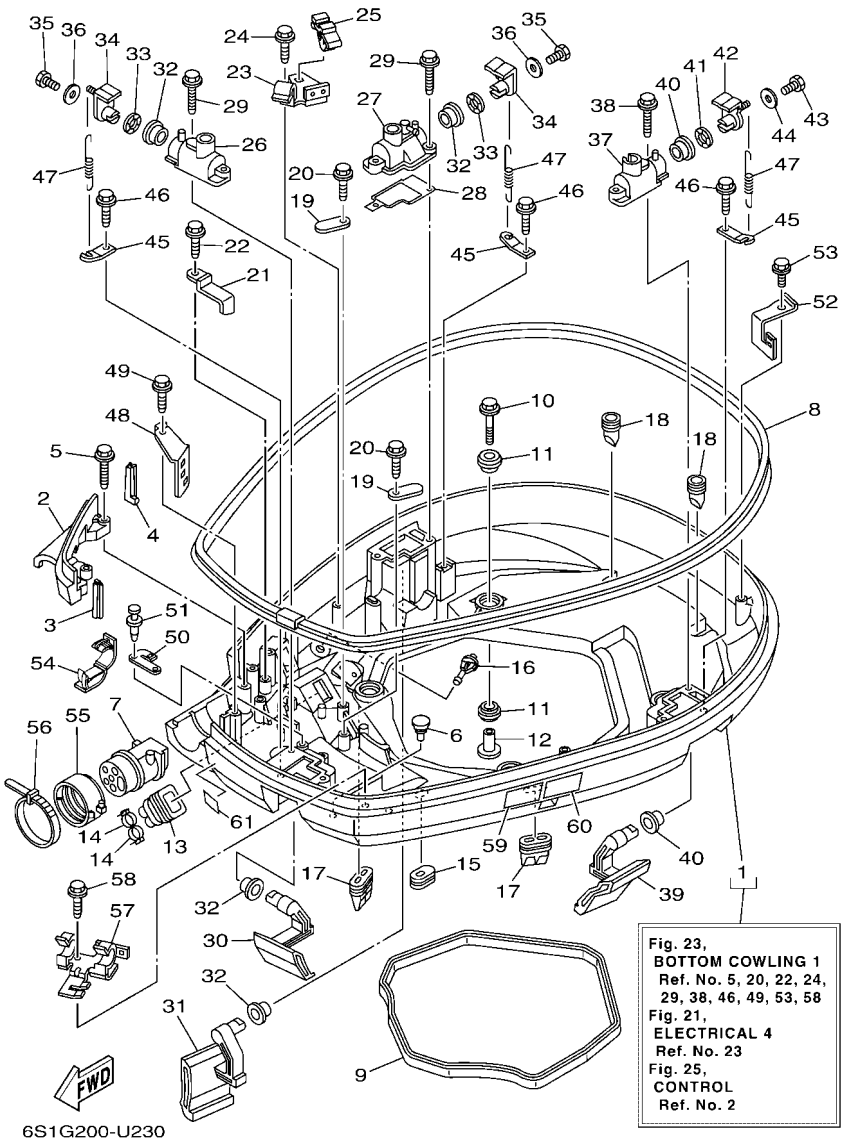

FIG. 23 BOTTOM COWLING 1 — CUBIERTA INFERIOR 1

REF. NO.	PART NO. CODIGO Nº	DESCRIPTION DESCRIPCION	6S1M	CAR	6S2M			REMARKS OBSERVACIONES
1	6P2–42710–00–8D	BOTTOM COWLING ASSY CUBIERTA INFERIOR COMPL.	1	1	1			
2	6P2–42738–00–8D	PLATE, FITTING PLACA DE AJUSTE	1	1	1			
3	6P2–42717–00	RUBBER, SEAL 2 GOMA	1	1	1			
4	6P2–42718–00	RUBBER, SEAL 3 GOMA	1	1	1			
5	90109–06M82	BOLT PERNO	2	2	2			
6	6H4–42748–01	GROMMET TAPON	2	2	2			
7	6P2–42725–02	GROMMET TAPON	1	1	1			
8	6P2–42615–00	SEAL SELLO	1	1	1			
9	69J–42716–01	RUBBER SEAL 1 SELLO DE GOMA 1	1	1	1			
10	90119–08187	BOLT, WITH WASHER TORNILLO CON ARANDELA	4	4	4			
11	90480–22M81	GROMMET TAPON	8	8	8			
12	90387–08M37	COLLAR ESPACIADOR	4	4	4			
13	6H1–42726–22	GROMMET TAPON	1	1	1			
14	90465–11M10	CLAMP BRIDA	2	2	2			
15	61A–42727–01	GROMMET TAPON	1	1	1			
16	6P2–44391–00	NIPPLE, HOSE NIPLE MANGUERA	1	1	1			
17	69J–42717–01	RUBBER, SEAL 2 GOMA	2	2	2			
18	61A–42717–00	RUBBER, SEAL 2 GOMA	2	2	2			
19	6E5–82588–00	PLATE PLACA	2	2	2			
20	90109–06M81	BOLT PERNO	2	2	2			
21	90462–20001	CLAMP BRIDA	1	1				
22	90109–06M86	BOLT PERNO	1	1				
23	6P2–82554–00	STAY, NEUTRAL SWITCH SOPORTE INTERRUPTOR DE NEUTRAL	1	1	1			
24	90109–06M86	BOLT PERNO	1	1	1			
25	90464–09M47	CLAMP BRIDA	1	1	1			
26	69J–42828–02–9S	PLATE, CLAMP PLACA, GRAMPA	1	1	1			
27	6P2–42828–00–9S	PLATE, CLAMP PLACA, GRAMPA	1	1	1			

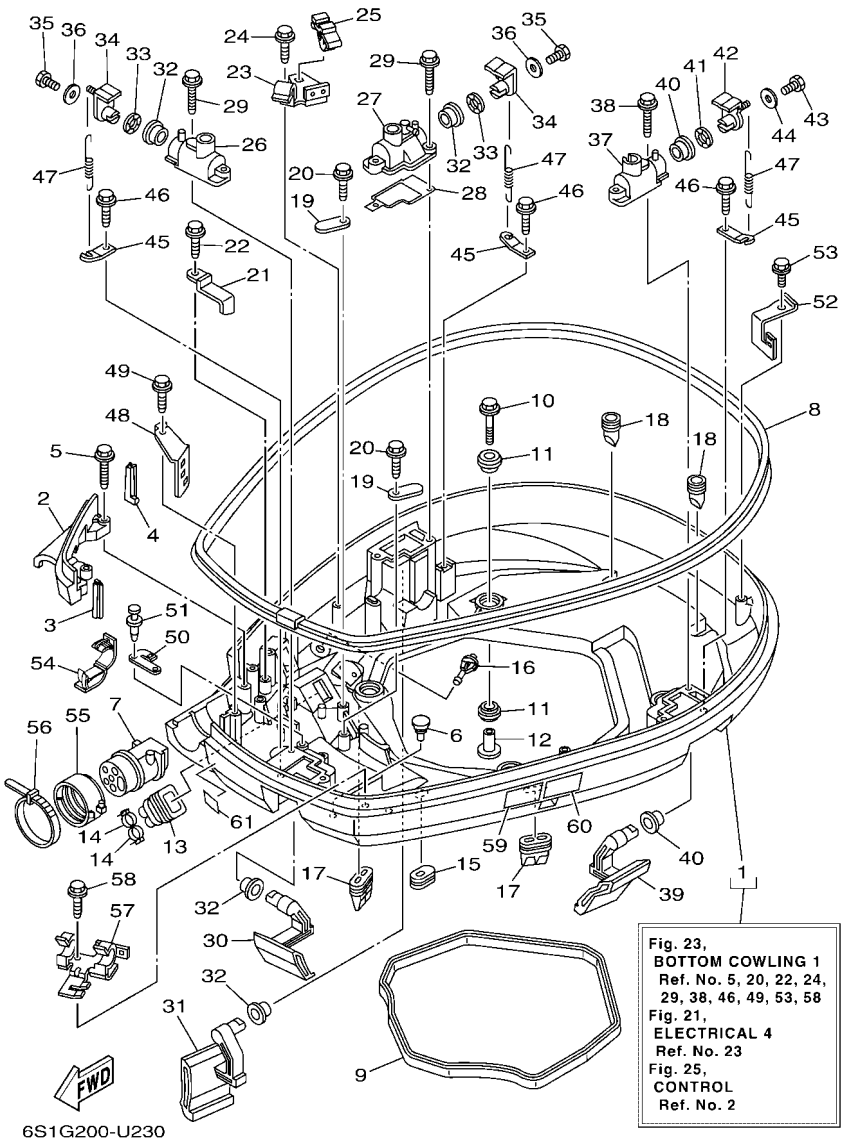

FIG. 23 BOTTOM COWLING 1 — CUBIERTA INFERIOR 1

REF. NO.	PART NO. CODIGO Nº	DESCRIPTION DESCRIPCION	6S1M	CAR	6S2M			REMARKS OBSERVACIONES
28	6P2–42722–00	GASKET 2 JUNTA 2	1	1	1			
29	90109–06M82	BOLT PERNO	4	4	4			
30	69J–42815–00–8D	LEVER, CLAMP 1 PALANCA ABRAZADERA 1	1	1	1			
31	69J–42817–00–8D	LEVER, CLAMP 3 PALANCA ABRAZADERA 3	1	1	1			
32	90386–15M73	BUSH BUJE	4	4	4			
33	90206–15M18	WASHER, WAVE ARANDELA ONDULADA	2	2	2			
34	63P–42818–01	LEVER, CLAMP 4 PALANCA, ABRAZADERA 4	2	2	2			
35	97D95–06020	BOLT, HEXAGON DEEP RECESS TORNILLO HEXAGONAL	2	2	2			
36	90201–06068	WASHER, PLATE ARANDELA PLANA	2	2	2			
37	68F–42828–11–9S	PLATE, CLAMP PLACA, GRAMPA	1	1	1			
38	90109–06M82	BOLT PERNO	2	2	2			
39	69J–42816–00–8D	LEVER, CLAMP 2 PALANCA ABRAZADERA 2	1	1	1			
40	90386–15M73	BUSH BUJE	2	2	2			
41	90206–15M18	WASHER, WAVE ARANDELA ONDULADA	1	1	1			
42	68V–42818–01	LEVER, CLAMP 4 PALANCA, ABRAZADERA 4	1	1	1			
43	97D95–06020	BOLT, HEXAGON DEEP RECESS TORNILLO HEXAGONAL	1	1	1			
44	90201–06068	WASHER, PLATE ARANDELA PLANA	1	1	1			
45	64D–43144–00	HOOK, SPRING GANCHO	3	3	3			
46	90109–06M86	BOLT PERNO	3	3	3			
47	90506–18M40	SPRING, TENSION RESORTE DE TENSION	3	3	3			
48	6P2–42743–00	BRACKET SOPORTE	1	1	1			
49	90109–06M82	BOLT PERNO	1	1	1			
50	6P2–42766–20	BRACKET 2 SOPORTE 2	1	1	1			
51	90269–05005	RIVET REMACHE	2	2	2			
52	69J–8366G–02	BRACKET 3 SOPORTE 3	1	1	1			
53	90109–06M86	BOLT PERNO	1	1	1			
54	90464–18004	CLAMP BRIDA	2	2	2			

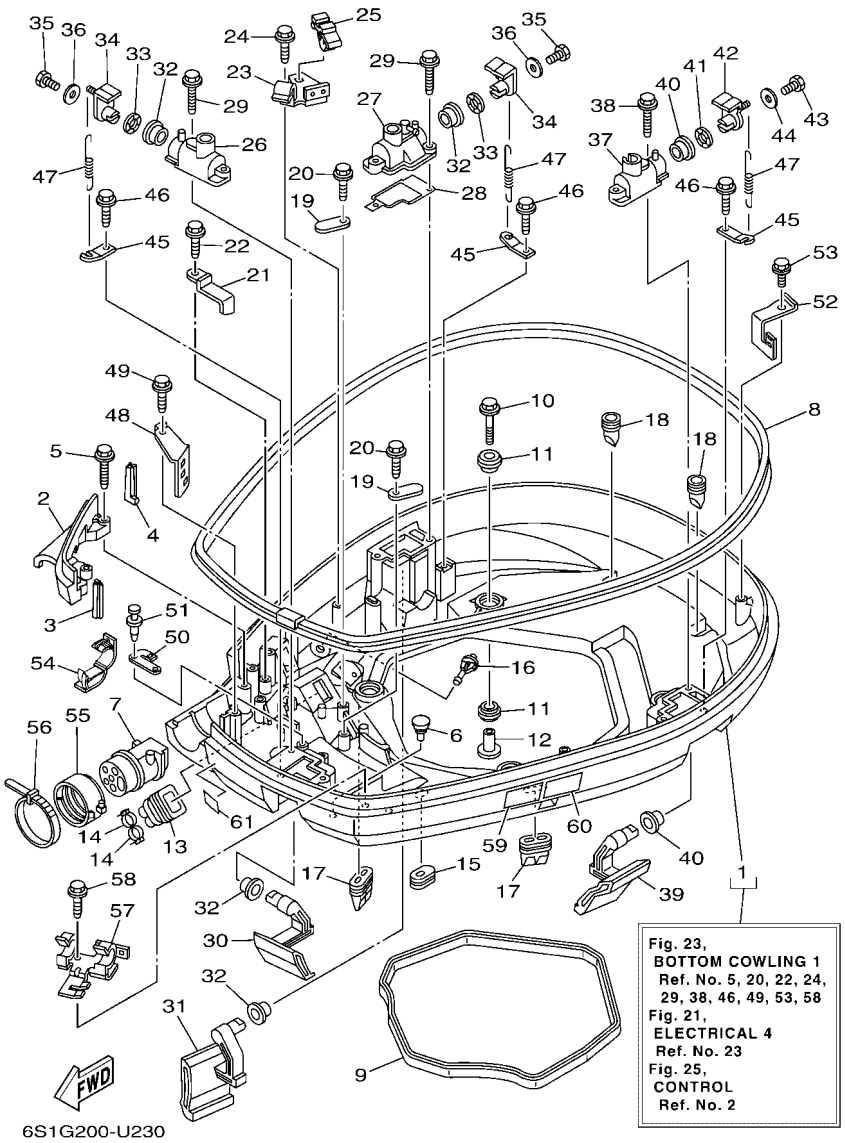

FIG. 23 BOTTOM COWLING 1 — CUBIERTA INFERIOR 1

REF. NO.	PART NO. CODIGO Nº	DESCRIPTION DESCRIPCION	6S1M	CAR	6S2M			REMARKS OBSERVACIONES
55	68F–42753–00	FASTNER TIRADOR	1	1	1			AP AP
56	90464–20258	CLAMP BRIDA	1	1	1			AP AP
57	6P2–82594–00	CLAMP GRAMPA	1	1	1			
58	90109–06M86	BOLT PERNO	1	1	1			
59	6EE–42794–41	LABEL, WARNING (GENERAL) ETIQUETA DE PRECAUCION	1	1	1			EXCEPT FOR BRA EXCEPT FOR BRA
	6EE–42794–71	LABEL, WARNING (GENERAL) ETIQUETA DE PRECAUCION	1		1			FOR BRA FOR BRA
60	6EE–42794–51	LABEL, WARNING (GENERAL) ETIQUETA DE PRECAUCION	1	1	1			FOR CAR,AFR FOR CAR,AFR
61	6AH–81996–01	MARK MARCA		1	1			FOR CAR FOR CAR

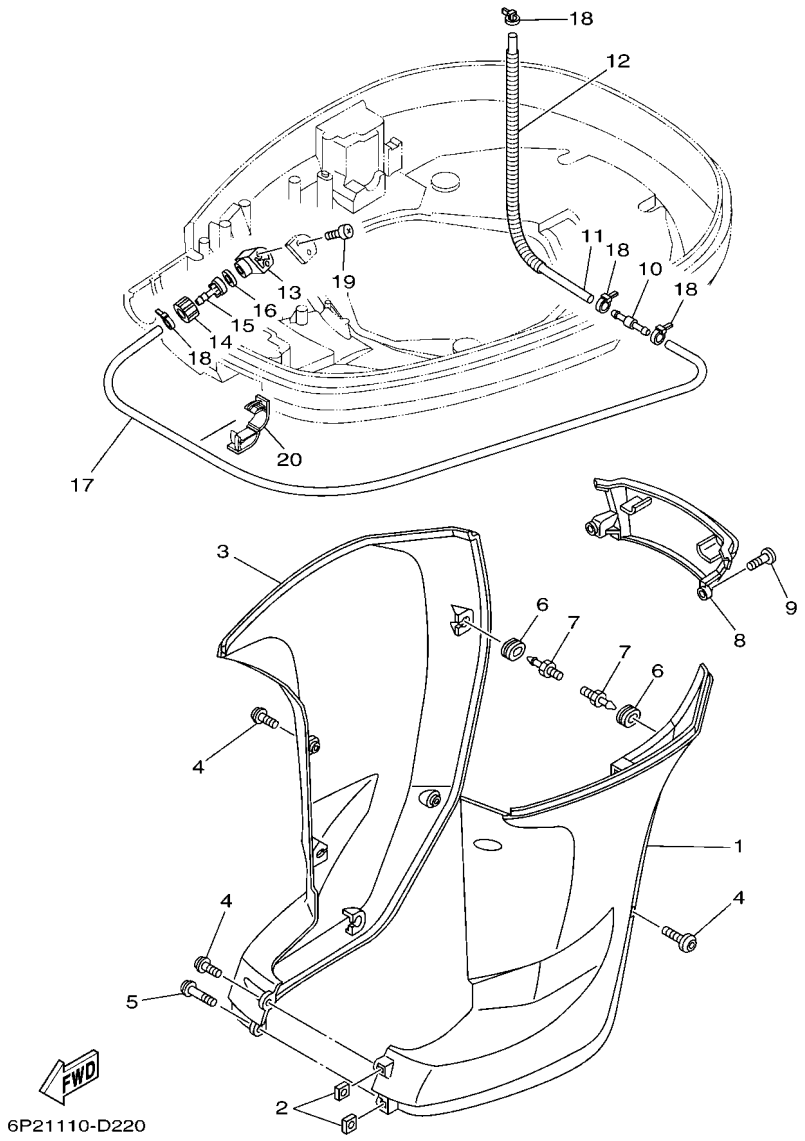

FIG. 24 BOTTOM COWLING 2 — CUBIERTA INFERIOR 2

REF. NO.	PART NO. CODIGO Nº	DESCRIPTION DESCRIPCION	6S1M	CAR	6S2M			REMARKS OBSERVACIONES
1	69J–42741–00–8D	APRON, 1 MANDIL 1	1	1	1			
2	90173–06001	NUT, SQUARE TUERCA CUADRADA	2	2	2			
3	69J–42771–00–8D	APRON, 2 MANDIL 2	1	1	1			
4	90111–06144	BOLT, HEXAGON SOCKET BUTTON TORNILLO	5	5	5			
5	90111–06142	BOLT, HEXAGON SOCKET BUTTON TORNILLO	1	1	1			
6	90480–14M17	GROMMET TAPON	6	6	6			
7	69J–42774–10	STAY, APRON 1 BUJEDEL PIVOTE DE LA FLECHA	6	6	6			
8	69J–45151–00–8D	COVER, UPPER CASING CUBIERTA FUNDA SUPERIOR	1	1	1			
9	90111–06144	BOLT, HEXAGON SOCKET BUTTON TORNILLO	2	2	2			
10	6E5–24379–00	PIPE, JOINT 4 TUBO DE UNION 4	1	1	1			
11	90445–11M47	HOSE (L370) TUBO (L370)	1	1	1			
12	90447–13009	TUBE TUBO	1	1	1			
13	6DR–12572–00	ADAPTER ADAPTADOR	1	1	1			
14	6R3–12581–00	JOINT, HOSE 1 CONEXION	1	1	1			
15	6R3–12582–00	JOINT, HOSE 2 CONEXION	1	1	1			
16	6R3–12583–00	GASKET, HOSE JOINT EMPAQUETADURA JUNTA DE MANGUE	1	1	1			
17	90445–11028	HOSE (L1050) TUBO (L1050)	1	1	1			
18	90465–11M10	CLAMP BRIDA	4	4	4			
19	97780–60520	SCREW, TAPPING TORNILLO DE CABEZA DE CONO ACH	2	2	2			
20	90464–18004	CLAMP BRIDA	1	1	1			

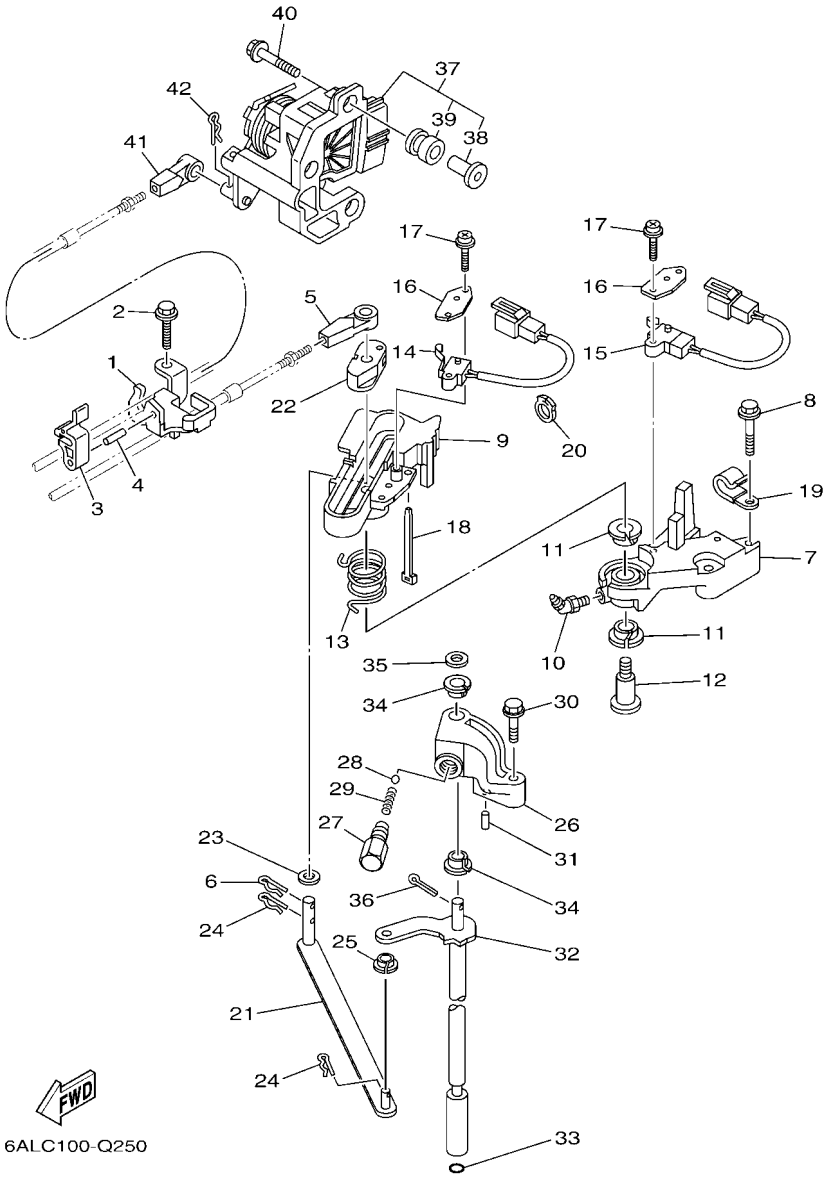

FIG. 25 CONTROL — CONTROL

REF. NO.	PART NO. CODIGO Nº	DESCRIPTION DESCRIPCION	6S1M	CAR	6S2M			REMARKS OBSERVACIONES
1	6P2–48531–00	BRACKET, REMOTE CONTROL 1 SOPORTE DE CONTROL REMOTO	1	1	1			
2	90109–06M86	BOLT PERNO	2	2	2			
3	63P–48538–00	CLAMP, CABLE 1 GRAMPA DE CABLE	1	1	1			
4	91690–30010	PIN, SPRING PASADOR DE RESORTE	1	1	1			
5	6E5–48344–00	CABLE END, REMOTE CONTROL BASE CONTROL	1	1	1			
6	90468–18008	CLIP PRESILLA	1	1	1			
7	69J–44117–00	BRACKET SOPORTE	1	1	1			
8	97E95–06535	BOLT, HEXAGON W/W DEEP RECESS TORNILLO HEXAGONAL CON RONDONA	2	2	2			
9	69J–44176–01	BRACKET SOPORTE	1	1	1			
10	93700–06M01	NIPPLE, GREASE BOQUILLA DE ENGRASAR	1	1	1			
11	90386–12069	BUSH BUJE	2	2	2			
12	90109–08019	BOLT PERNO	1	1	1			
13	90508–20020	SPRING, TORSION RESORTE DE TORSION	1	1	1			
14	60V–8259F–01	SWITCH ASSY INTERRUPTOR	1	1	1			
15	69J–8259F–00	SWITCH ASSY INTERRUPTOR	1	1	1			
16	61A–82588–01	PLATE PLACA	2	2	2			
17	97985–04116	SCREW, WITH WASHER TORNILLO, CON ARANDELA	4	4	4			
18	90465–11M10	CLAMP BRIDA	1	1	1			
19	90465–06M86	CLAMP BRIDA	1	1	1			
20	90464–09010	CLAMP BRIDA	1	1	1			
21	6P2–44121–00	LEVER, SHIFT ROD PALANCA VARILLA CAMBIOS	1	1	1			
22	69J–44122–00	BUSHING, SHIFT ROD LEVER BUJE PALANCA VARILLA DE CAMBIO	1	1	1			
23	90202–08M20	WASHER, PLATE ARANDELA DE PLANA	1	1	1			
24	90468–18008	CLIP PRESILLA	2	2	2			
25	90386–06M12	BUSH BUJE	1	1	1			
26	69J–44118–00	BRACKET SOPORTE	1	1	1			
27	648–42715–00	BUSHING 2 BUJE 2	1	1	1			

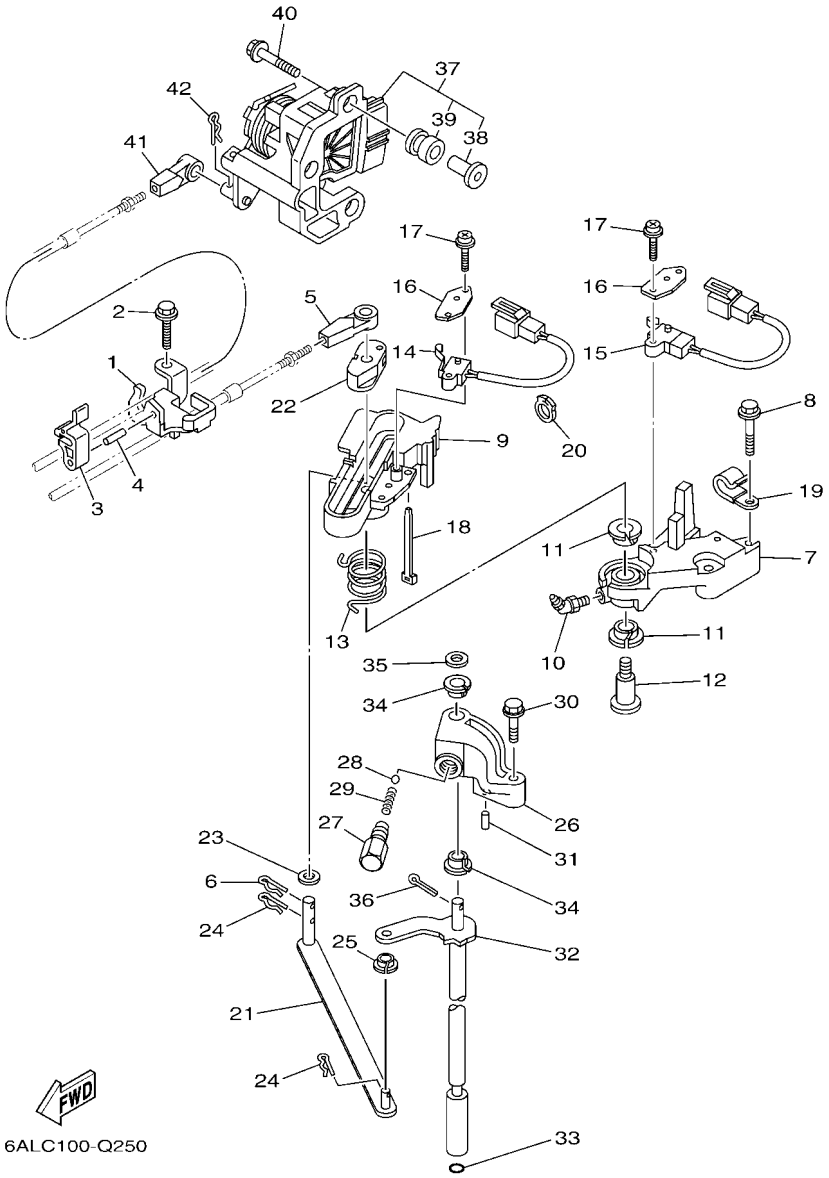

FIG. 25 CONTROL

CONTROL

REF. NO.	PART NO. CODIGO Nº	DESCRIPTION DESCRIPCION	6S1M	CAR	6S2M			REMARKS OBSERVACIONES
28	93501–04M02	BALL BOLA	1	1	1			
29	90501–12082	SPRING, COMPRESSION RESORTE DE COMPRESION	1	1	1			
30	97E75–06535	BOLT, HEXAGON W/W DEEP RECESS TORNILLO HEXAGONAL CON RONDONA	1	1	1			
31	91690–30010	PIN, SPRING PASADOR DE RESORTE	1	1	1			
32	69J–44120–02	HANDLE GEAR SHIFT ASSY MANIJA DE CAMBIO COMPL	1	1	1			X(25.3") X(25.3")
	69J–44120–12	HANDLE GEAR SHIFT ASSY MANIJA DE CAMBIO COMPL	1		1			U(30.3") U(30.3")
33	93210–09165	O-RING ANILLO O	1	1	1			
34	90386–90M90	BUSH BUJE	2	2	2			
35	90201–09M02	WASHER, PLATE ARANDELA PLANA	1	1	1			
36	91490–20015	PIN. COTTER CHAVETA	1	1	1			
37	6P2–8A410–02	SENSOR UNIT UNIDAD DE SENSOR	1	1	1			
38	6P2–44139–00	.COLLAR .COLLAR	3	3	3			
39	6CB–41273–00	.GROMMET .TAPON PROTECTOR	3	3	3			
40	90119–06297	BOLT, WITH WASHER TORNILLO CON ARANDELA	3	3	3			
41	6E5–48344–00	CABLE END, REMOTE CONTROL BASE CONTROL	1	1	1			
42	90468–18008	CLIP PRESILLA	1	1	1			

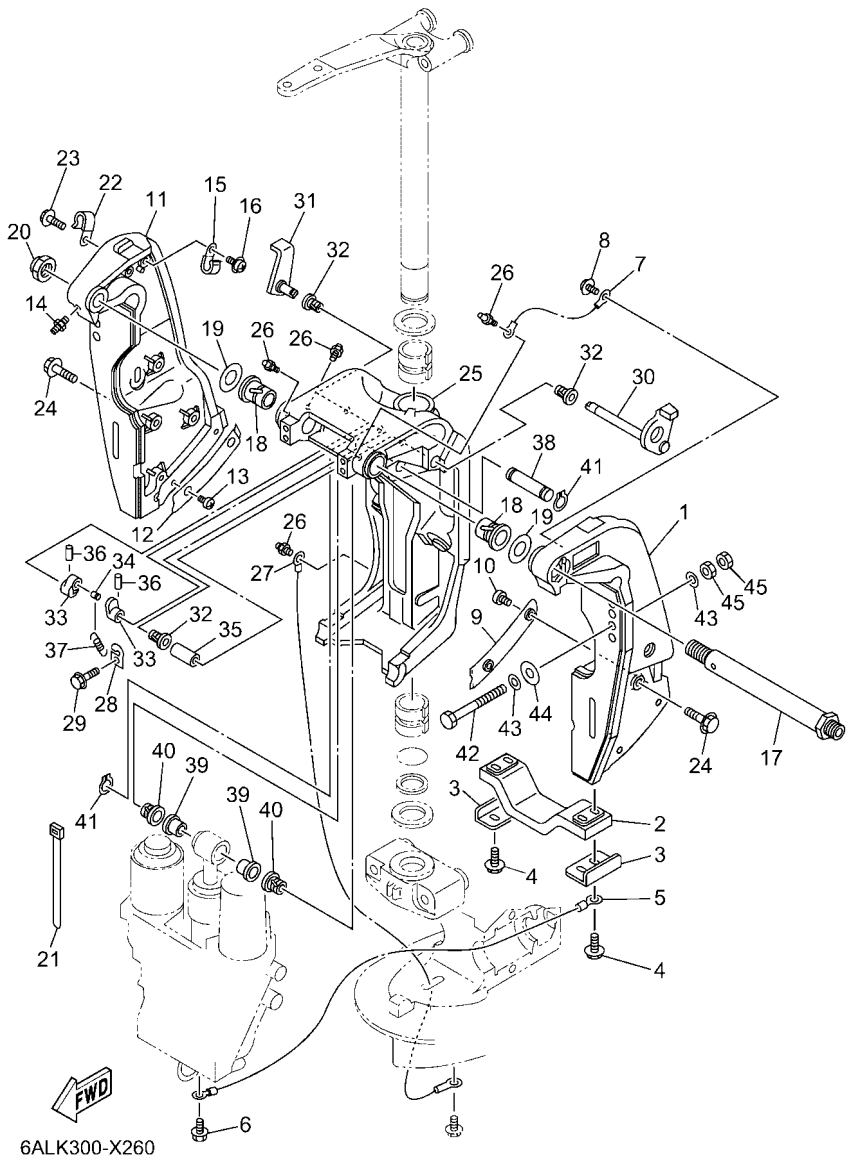

FIG. 26 BRACKET 1 — SOPORTE 1

REF. NO.	PART NO. CODIGO Nº	DESCRIPTION DESCRIPCION	6S1M	CAR	6S2M			REMARKS OBSERVACIONES
1	69J–43111–03–8D	BRACKET, CLAMP 1 SOPORTE DE LA ABRAZADERA 1	1	1	1			
2	6G5–45251–02	ANODE CATODE	1	1	1			
3	6G5–44526–00	PLATE PLACA 1	2	2	2			
4	97E95–06525	BOLT, HEXAGON W/W DEEP RECESS TORNILLO HEXAGONAL CON RONDONA	4	4	4			
5	6H1–82148–00	WIRE, LEAD 4 CABLE CONDUCTOR 4	1	1	1			
6	97E95–06510	BOLT, HEXAGON W/W DEEP RECESS TORNILLO HEXAGONAL CON RONDONA	1	1	1			
7	6E5–82148–00	WIRE, LEAD 4 CABLE CONDUCTOR 4	1	1	1			
8	97985–06212	SCREW, WITH WASHER TORNILLO, CON ARANDELA	1	1	1			
9	61A–43132–01	WASHER, FRICTION ARANDELA DE FRICCION	1	1	1			
10	97885–06010	SCREW, PAN HEAD TORNILLO A MUESCA	2	2	2			
11	69J–43112–03–8D	BRACKET, CLAMP 2 SOPORTE DE LA ABRAZADERA 2	1	1	1			
12	61A–43133–01	WASHER,FRICTION RONDANA	1	1	1			
13	97885–06010	SCREW, PAN HEAD TORNILLO A MUESCA	2	2	2			
14	93700–06002	NIPPLE, GREASE BOQUILLA DE ENGRASAR	1	1	1			
15	90465–08M83	CLAMP BRIDA	1	1	1			
16	97985–06212	SCREW, WITH WASHER TORNILLO, CON ARANDELA	1	1	1			
17	6R3–43131–00	BOLT, CLAMP BRACKET TORNILLO DE ABRAZADERA DEL SOP	1	1	1			
18	90386–25M31	BUSH BUJE	2	2	2			
19	90201–26M59	WASHER, PLATE ARANDELA PLANA	2	2	2			
20	90185–22M11	NUT, SELF-LOCKING TUERCA AUTOBLOCANTE	1	1	1			
21	90465–11M10	CLAMP BRIDA	4	4	4			
22	90465–08M83	CLAMP BRIDA	1	1	1			
23	97585–06510	BOLT, WITH WASHER PERNO CON ARANDELA	1	1	1			
24	90119–10024	BOLT, WITH WASHER TORNILLO CON ARANDELA	8	8	8			
25	61A–43311–22–8D	BRACKET, SWIVEL 1 SOPORTE GIRATORIO 1	1	1	1			
26	93700–06002	NIPPLE, GREASE BOQUILLA DE ENGRASAR	5	5	5			
27	69J–82147–00	WIRE, LEAD 5 CABLE CONDUCTOR 5	1	1	1			

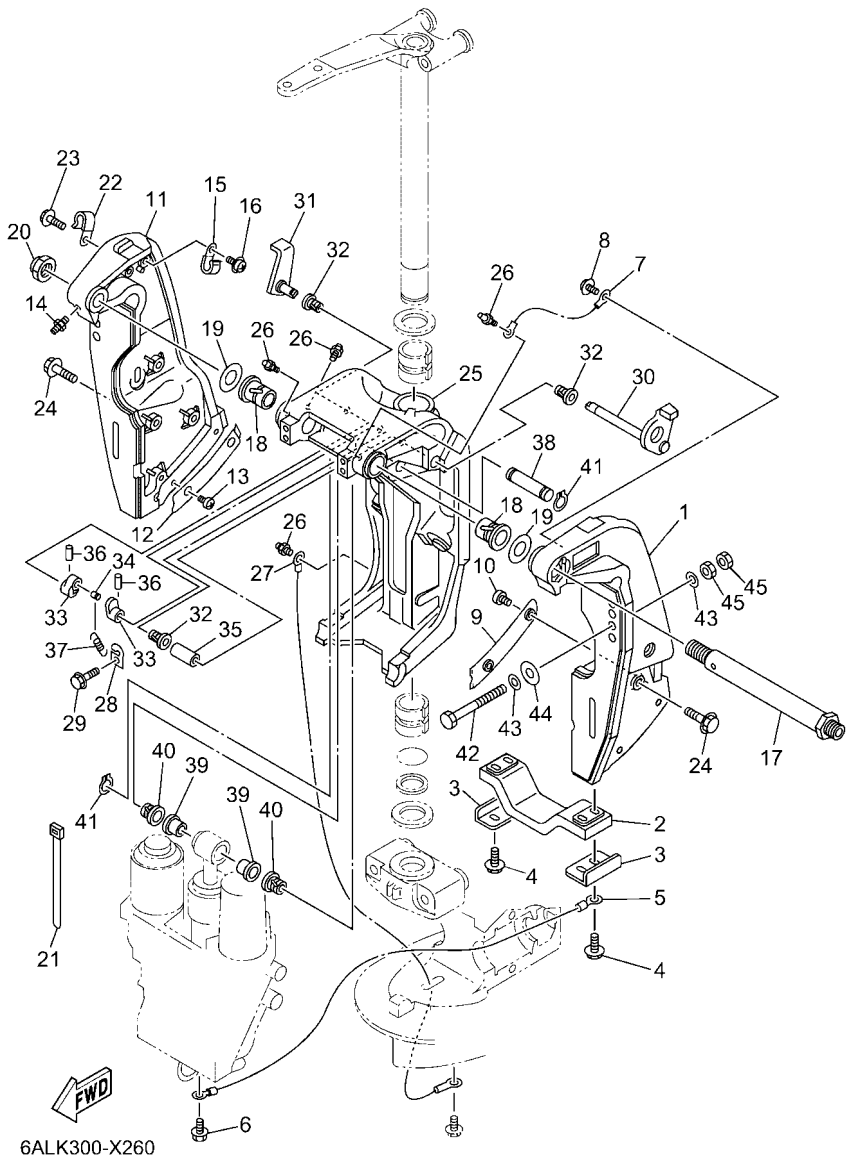

6ALK300-X260

FIG. 26 BRACKET 1 — SOPORTE 1

REF. NO.	PART NO. CODIGO Nº	DESCRIPTION DESCRIPCION	6S1M	CAR	6S2M			REMARKS OBSERVACIONES
28	6G5–43144–00	HOOK, SPRING GANCHO	1	1	1			
29	97E95–06512	BOLT, HEXAGON W/W DEEP RECESS TORNILLO HEXAGONAL CON RONDONA	1	1	1			
30	61A–43181–01	LEVER, TILT STOP 1 PALANCA TOPE INCLINACION 1	1	1	1			
31	6G5–43185–02	LEVER, TILT STOP 2 PALANCA TOPE INCLINACION 2	1	1	1			
32	90386–10M16	BUSH BUJE	3	3	3			
33	6G5–43148–00	COLLAR, DISTANCE COLLAR	2	2	2			
34	90249–06M19	PIN PASADOR	1	1	1			
35	90387–10M05	COLLAR ESPACIADOR	1	1	1			
36	91690–30020	PIN, SPRING PASADOR DE RESORTE	2	2	2			
37	90506–16003	SPRING, TENSION RESORTE DE TENSION	1	1	1			
38	6E5–43126–10	PIN, UPPER SHOCK MOUNT PASADOR DE AMORTIGUADOR SUPERI	1	1	1			
39	90386–18M63	BUSH BUJE	2	2	2			
40	90386–18M14	BUSH BUJE	2	2	2			
41	93410–18M05	CIRCLIP SEGURO	2	2	2			
42	90101–12065	BOLT (L:130MM) TORNILLO (L:130MM)	4	4	4			FOR CHN,CAR FOR CHN,CAR
	90101–12065	BOLT (L:130MM) TORNILLO (L:130MM)	2		2			EXCEPT FOR CHN,CAR,BRA EXCEPT FOR CHN,CAR,BRA
	90101–12066	BOLT (L:150MM) TORNILLO (L:150MM)	2		2			EXCEPT FOR CHN,CAR,BRA EXCEPT FOR CHN,CAR,BRA
	90101–12066	BOLT (L:150MM) TORNILLO (L:150MM)	4		4			FOR BRA FOR BRA
43	90201–13M01	WASHER, PLATE ARANDELA PLANA	8	8	8			
44	90201–12426	WASHER, PLATE ARANDELA PLANA	4	4	4			
45	95380–12600	NUT TUERCA	8	8	8			

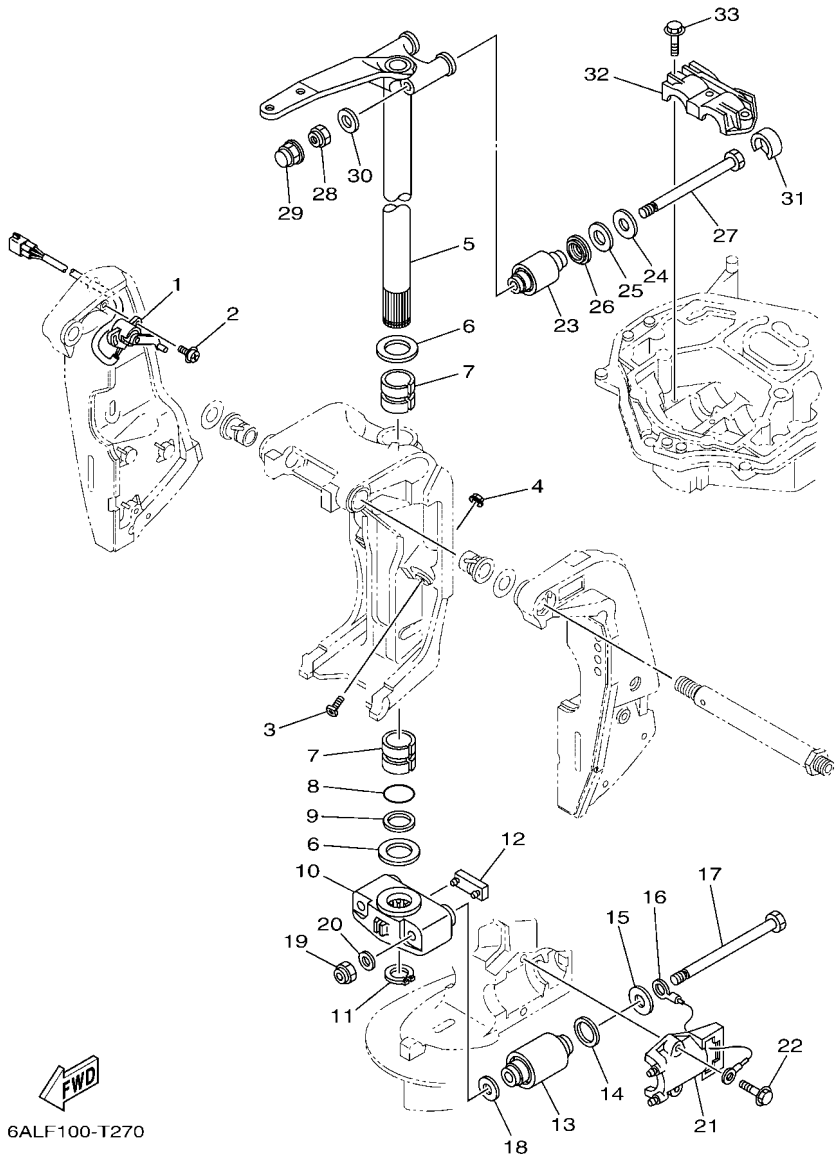

FIG. 27 BRACKET 2 — SOPORTE 2

REF. NO.	PART NO. CODIGO Nº	DESCRIPTION DESCRIPCION	6S1M	CAR	6S2M			REMARKS OBSERVACIONES
1	69J–83672–12	TRIM SENDER TRANSMISOR DE INCLINADOR	1	1	1			
2	97985–06216	SCREW, WITH WASHER TORNILLO, CON ARANDELA	2	2	2			
3	6AW–43376–00	BOLT, THRUST RECEIVER TORNILLO RECEPTOR	2	2	2			
4	95780–10300	NUT, FLANGE TUERCA	2	2	2			
5	69J–42510–00–8D	STEERING BRACKET ASSY SOPORTE DIRECCION COMPL.	1	1	1			
6	90201–40M00	WASHER, PLATE ARANDELA PLANA	2	2	2			
7	90386–39M89	BUSH BUJE	2	2	2			
8	93210–35321	O-RING ANILLO O	1	1	1			
9	90202–40M47	WASHER, PLATE ARANDELA DE PLANA	1	1	1			
10	69J–44551–00–8D	HOUSING, LOWER MOUNT RUBBER 1 CAJA AMORTIGUADOR INFERIOR HU	1	1	1			
11	93410–36102	CIRCLIP SEGURO	1	1	1			
12	61A–44575–01	DAMPER, LOWER MOUNT RUBBER AMORTIGUADOR INFERIOR	1	1	1			
13	60X–44555–00	MOUNT DAMPER, LOWER SIDE AMORTIGUADOR DE HULE LADO INFE	2	2	2			
14	90202–32M19	WASHER, PLATE ARANDELA DE PLANA	2	2	2			
15	90201–16016	WASHER, PLATE ARANDELA PLANA	2	2	2			
16	6E5–82149–00	WIRE, LEAD 3 CABLE CONDUCTOR 3	1	1	1			
17	90101–14002	BOLT TORNILLO	2	2	2			
18	90201–15M58	WASHER, PLATE ARANDELA PLANA	2	2	2			
19	90185–14M00	NUT, SELF-LOCKING TUERCA AUTOBLOCANTE	2	2	2			
20	92995–14600	WASHER ARANDELA	2	2	2			
21	61A–44552–01–CA	HOUSING, LOWER MOUNT RUBBER 2 CAJA AMORTIGUADOR INFERIOR HU	2	2	2			
22	90119–10024	BOLT, WITH WASHER TORNILLO CON ARANDELA	4	4	4			
23	69J–44514–00	MOUNT DAMPER, UPPER SIDE AMORTIGUADOR LADO SUPERIOR	2	2	2			
24	90201–16015	WASHER, PLATE ARANDELA PLANA	2	2	2			
25	90202–28M46	WASHER, PLATE ARANDELA DE PLANA	2	2	2			
26	69J–44532–00	STOPPER, UPPER MOUNT RETEN	2	2	2			
27	90101–14003	BOLT TORNILLO	2	2	2			

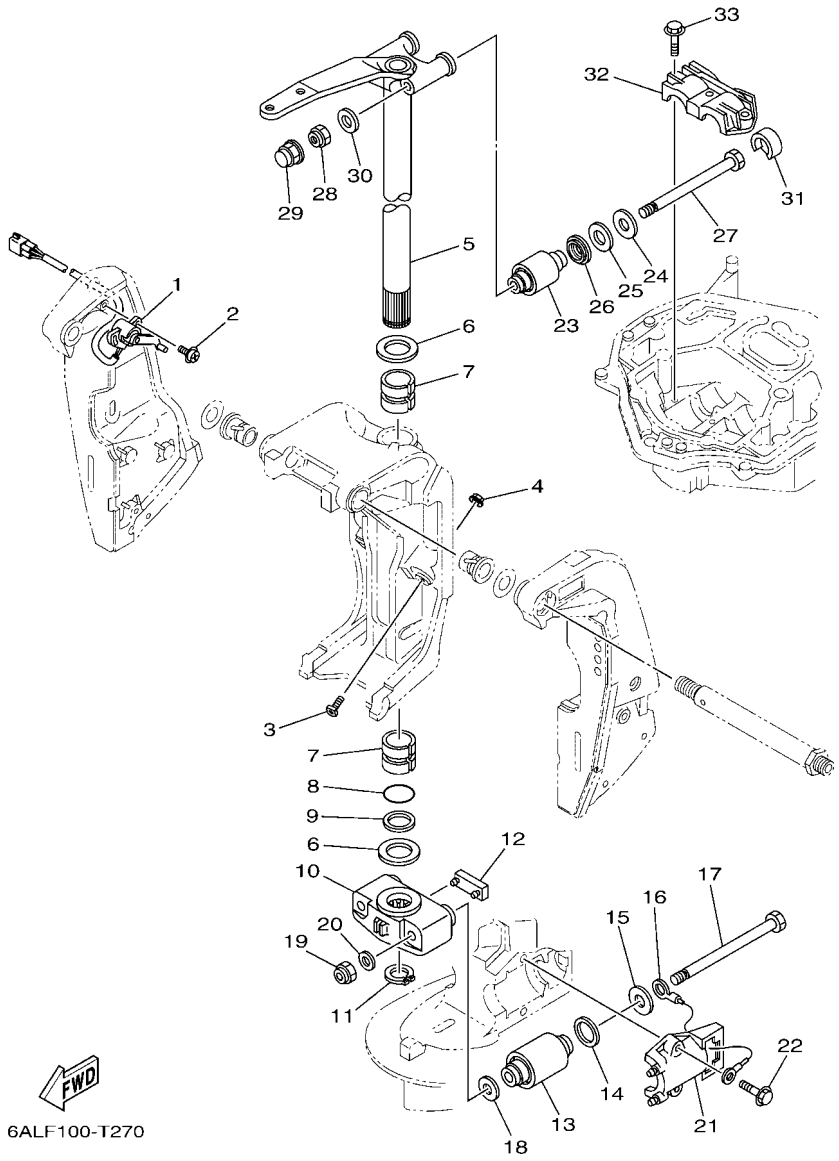

FIG. 27 BRACKET 2 — SOPORTE 2

REF. NO.	PART NO. CODIGO Nº	DESCRIPTION DESCRIPCION	6S1M	CAR	6S2M			REMARKS OBSERVACIONES
28	90185–14M00	NUT, SELF-LOCKING TUERCA AUTOBLOCANTE	2	2	2			
29	6DA–44194–00	CAP TAPA	2	2	2			
30	92995–14600	WASHER ARANDELA	2	2	2			
31	69J–44533–00	DAMPER, UPPER MOUNT RUBBER AMORTIGUADOR SUPERIOR	2	2	2			
32	61A–44511–01	COVER, UPPER MOUNT CUBIERTA AMORTIGUADOR SUPERIOR	1	1	1			
33	90119–10024	BOLT, WITH WASHER TORNILLO CON ARANDELA	3	3	3			

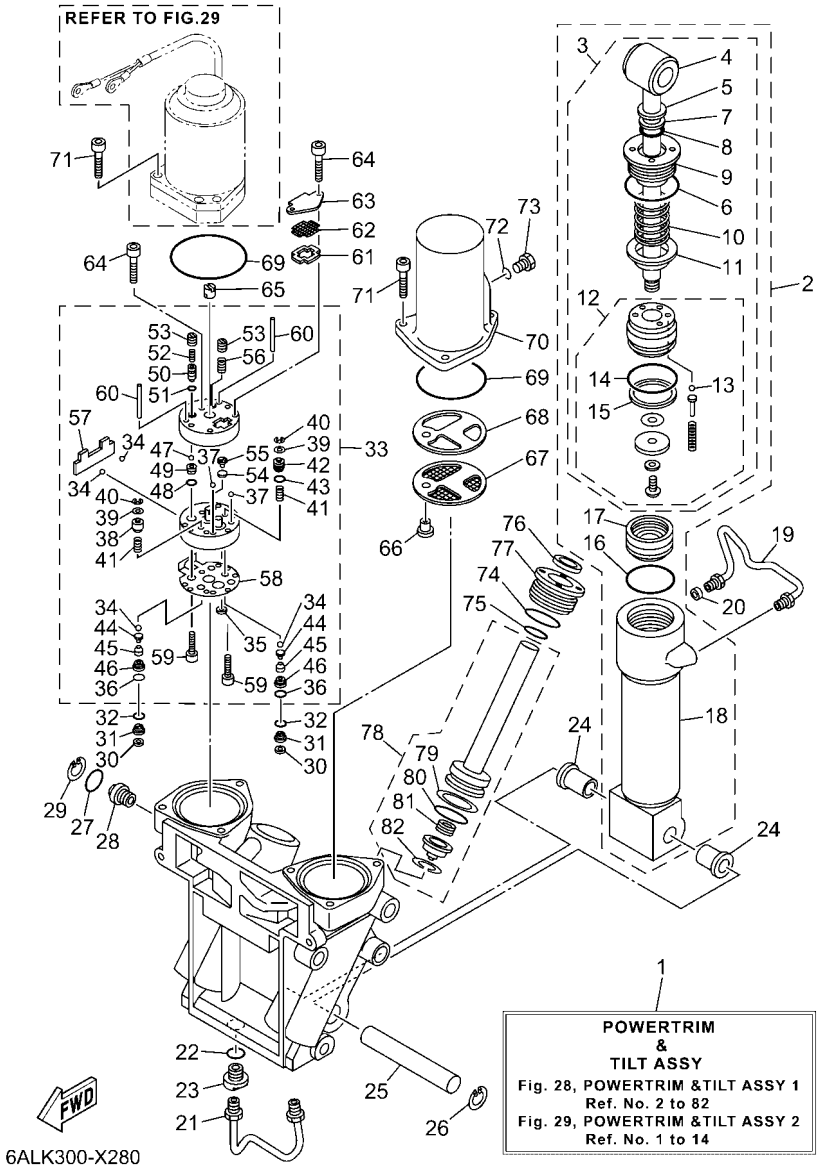

FIG. 28 POWER TRIM & TILT ASSY 1 — COMPONER Y PODER VARILLA 1

REF. NO.	PART NO. CODIGO Nº	DESCRIPTION DESCRIPCION	6S1M	CAR	6S2M			REMARKS OBSERVACIONES
1	69J–43800–14–8D	POWER TRIM & TILT ASSY ELEVADOR HIDRAULICO COMPL.	1	1	1			
2	6CE–43840–01	POWER TILT ASSY CONJUNTO COMPONER	1	1	1			
3	6CE–43810–01	.TILT PISTON SUB ASSY .ELEVADOR SUB-PISTON COMPL.	1	1	1			
4	69J–43801–01	..ROD ..VALILLA COMPL INCLINACION	1	1	1			
5	93106–19001	..OIL SEAL ..SELLO ACEITE	1	1	1			
6	63P–43861–20	..O-RING ..ANILLO EN O 1	1	1	1			
7	6H1–43872–00	..RING, BACK UP ..ANILLO	1	1	1			
8	61A–4389H–01	..O-RING ..ANILLO EN O	1	1	1			
9	61A–43811–00	..SCREW, CYLINDER END ..TORNILLO CILINDRO EXTREMO	1	1	1			
10	69J–4384H–00	..SPRING ..RESORTE	1	1	1			
11	69J–4382E–00	..ADAPTOR 2 ..ADAPTADOR 2	1	1	1			
12	6CE–4380P–00	..PISTON SUB ASSY ..SUB-PISTON COMPL	1	1	1			
13	93505–32038	...BALL ...BOLA	5	5	5			
14	61A–43861–00	...O-RING ...ANILLO EN O 1	1	1	1			
15	61A–43871–00	...RING, BACK UP ...ANILLO	1	1	1			
16	61A–43861–00	.O-RING .ANILLO EN O 1	1	1	1			
17	6H1–43814–11	.PISTON, FREE .PISTON LIBRE	1	1	1			
18	61A–43813–02	.CYLINDER, TILT .CILINDRO INCLINACION	1	1	1			
19	69J–43835–10	PIPE TUBO 3	1	1	1			
20	69J–4388J–00	PLUG 2 TAPON 2	1	1	1			
21	69J–43833–02	PIPE TUBO 1	1	1	1			
22	93210–17239	O-RING ANILLO O	1	1	1			
23	69J–4388E–01	BOLT ,SCREW PERNO	1	1	1			
24	90386–18M14	BUSH BUJE	2	2	2			
25	61A–43818–00	PIN, LOWER SHOCK MOUNT PASADOR AMORTIGUADOR INFERIOR	1	1	1			
26	61A–43876–01	RING, SNAP ANILLO	1	1	1			
27	6D8–43863–00	O-RING ANILLO EN O 3	1	1	1			

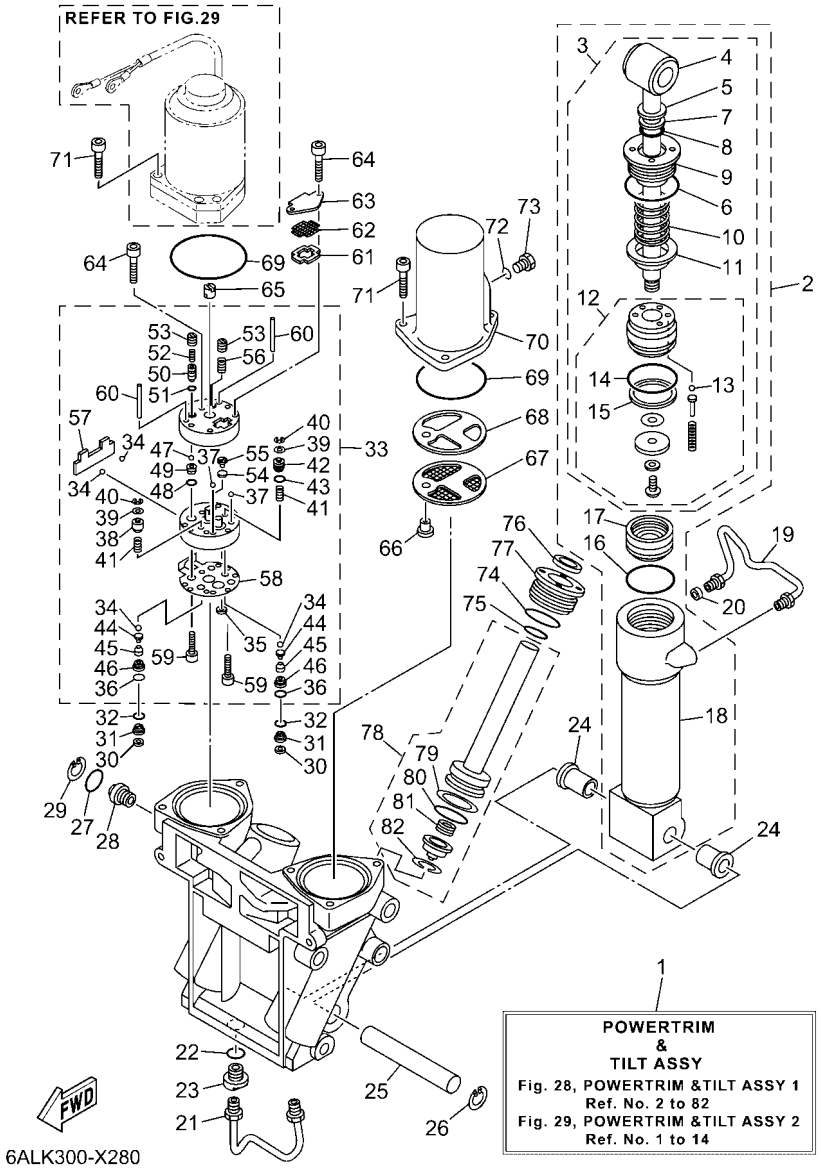

FIG. 28 POWER TRIM & TILT ASSY 1 — COMPONER Y PODER VARILLA 1

REF. NO.	PART NO. CODIGO Nº	DESCRIPTION DESCRIPCION	6S1M	CAR	6S2M			REMARKS OBSERVACIONES
28	69J–43845–00	SCREW, MANUAL RELEASE TORNILLO DESCOPLO MANUAL	1	1	1			
29	6H1–43875–00	RING, SNAP ANILLO	1	1	1			
30	69J–4381C–00	FILTER 3 FIELTRO 3	2	2	2			
31	69J–43899–01	PLATE STOPPER PLACA	2	2	2			
32	69J–4389J–00	O-RING ANILLO O	2	2	2			
33	69J–43830–01	GEAR PUMP ASSY ENGRANAJE BOMBA COMPL.	1	1	1			
34	93505–32038	.BALL .BOLA	4	4	4			
35	69J–4381C–00	.FILTER 3 .FIELTRO 3	1	1	1			
36	69J–4389J–00	.O-RING .ANILLO O	2	2	2			
37	93503–16003	.BALL .ESFERA	2	2	2			
38	6CJ–4384M–00	.PISTON, SHUTTLE 2 .PISTON 2	1	1	1			
39	69A–4384F–00	.SEAL, MAIN VALVE .ASIENTO	2	2	2			
40	99002–03600	.CIRCLIP .PRESILLA REDONDA	2	2	2			
41	69J–43894–00	.SPRING, SHUTTLE RETURN .RESORTE	2	2	2			
42	6CJ–43841–00	.PISTON, SHUTTLE .PISTON	1	1	1			
43	6H1–43883–00	.O-RING .ANILLO EN O 10	1	1	1			
44	60V–4386A–00	.PIN, ABSORBER VALVE .PASADOR VALVULA ABSORBER	2	2	2			
45	69J–43853–00	.SPRING, MAIN VALVE .RESORTE	2	2	2			
46	6CJ–43893–00	.WASHER .RONDANA	2	2	2			
47	93501–08001	.BALL .BOLA	2	2	2			
48	93210–08391	.O-RING .ANILLO O	1	1	1			
49	69J–43851–00	.SEAT, RELIEF VALVE .ASIENTO VALVULA DE DESCARGA	1	1	1			
50	63P–43844–20	.PIN, VALVE SUPPORT .PASADOR VALVULA SOPORTE	1	1	1			
51	93210–064A5	.O-RING .ANILLO O	1	1	1			
52	69J–43855–00	.SPRING, UP RELIEF .RESORTE SEGURIDAD SUPERIOR	1	1	1			
53	6CJ–43843–00	.SCREW, VALVE LOCK .TORNILLO	2	2	2			
54	6H1–4384G–11	.SEAL, RELIEF VALVE .ASIENTO	1	1	1			

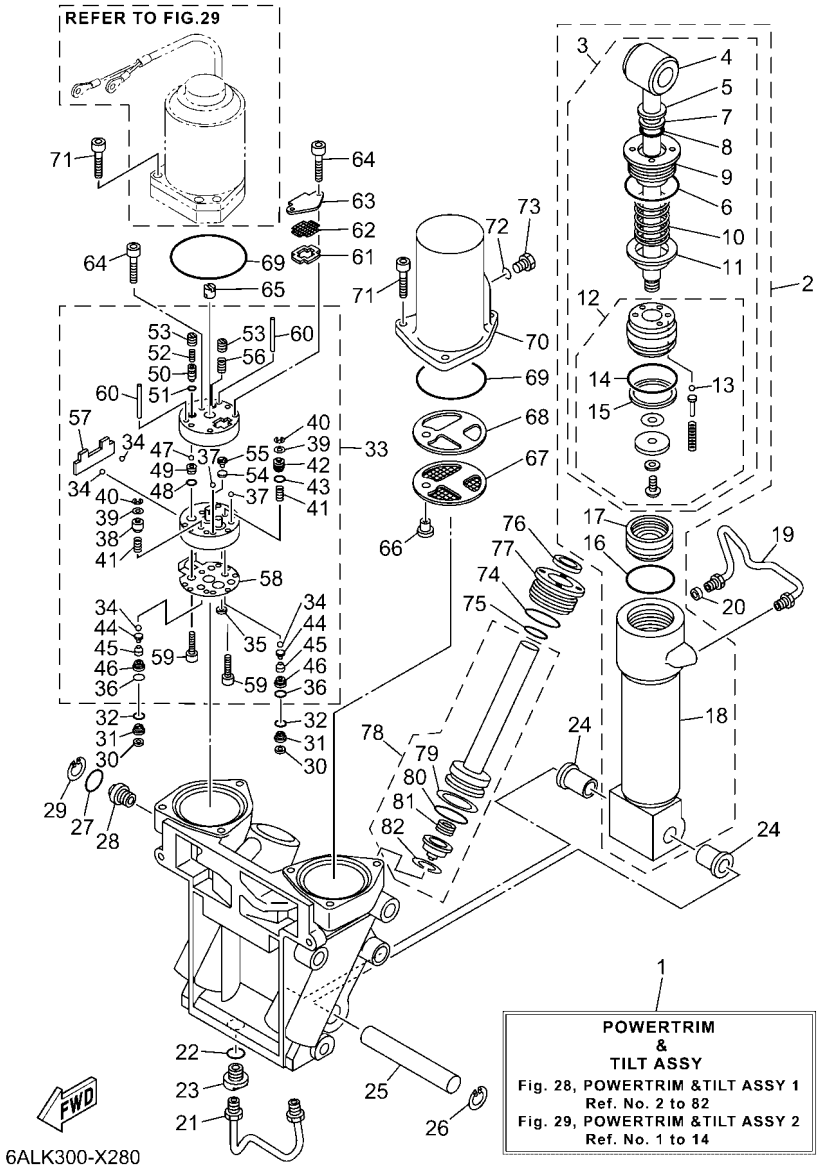

FIG. 28 POWER TRIM & TILT ASSY 1 — COMPONER Y PODER VARILLA 1

REF. NO.	PART NO. CODIGO Nº	DESCRIPTION DESCRIPCION	6S1M	CAR	6S2M			REMARKS OBSERVACIONES
55	6H1–43844–10	.PIN, VALVE SUPPORT .PASADOR VALVULA SOPORTE	1	1	1			
56	6H1–43856–10	.SPRING, DOWN RELIEF .RESORTE SEGURIDAD	1	1	1			
57	69J–43854–00	.SPRING, MANUAL RELEASE .RESORTE DESCOPLO MANUAL	1	1	1			
58	69J–4384G–00	.SEAL, RELIEF VALVE .ASIENTO	1	1	1			
59	91318–05025	.BOLT .TORNILLO	2	2	2			
60	93604–35236	.PIN, DOWEL .PASADOR DE CLAVIJA	2	2	2			
61	69J–43871–00	RING, BACK UP ANILLO	1	1	1			
62	69J–43816–00	FILTER 1 FIELTRO 1	1	1	1			
63	69J–4381J–00	PLATE PLACA	1	1	1			
64	91318–05040	BOLT TORNILLO	3	3	3			
65	69J–43831–00	CONNECTOR, SHAFT CONEXION EJE	1	1	1			
66	69J–4388H–00	PLUG TAPON	1	1	1			
67	69J–43817–00	FILTER 2 FIELTRO 2	1	1	1			
68	69J–4388F–00	SPACER ESPACIADOR	1	1	1			
69	93210–66001	O-RING ANILLO O	2	2	2			
70	69J–43828–00	BODY, RESERVOIR CUERPO DEPOSITO	1	1	1			
71	69J–43888–00	BOLT, SOCKET TORNILLO ENCASTRE	6	6	6			
72	93210–09165	O-RING ANILLO O	1	1	1			
73	6H1–43829–00	PLUG, RESERVOIR TAPON DEPOSITO	1	1	1			
74	61A–43861–00	O-RING ANILLO EN O 1	2	2	2			
75	6D8–43863–00	O-RING ANILLO EN O 3	2	2	2			
76	63P–43812–20	SEAL, DUST SELLO DE POLVO	2	2	2			
77	61A–43821–02	SCREW, TRIM CYLINDER END TORNILLO CILINDRO EXTREMO	2	2	2			
78	69J–43820–01	TRIM PISTON SUB ASSY ELEVADOR PISTON COMPL.	2	2	2			
79	61A–43874–00	.RING, BACK UP .ANILLO	1	1	1			
80	61A–43864–00	.O-RING .ANILLO EN O 4	1	1	1			
81	61A–4384H–10	.SPRING .RESORTE	1	1	1			

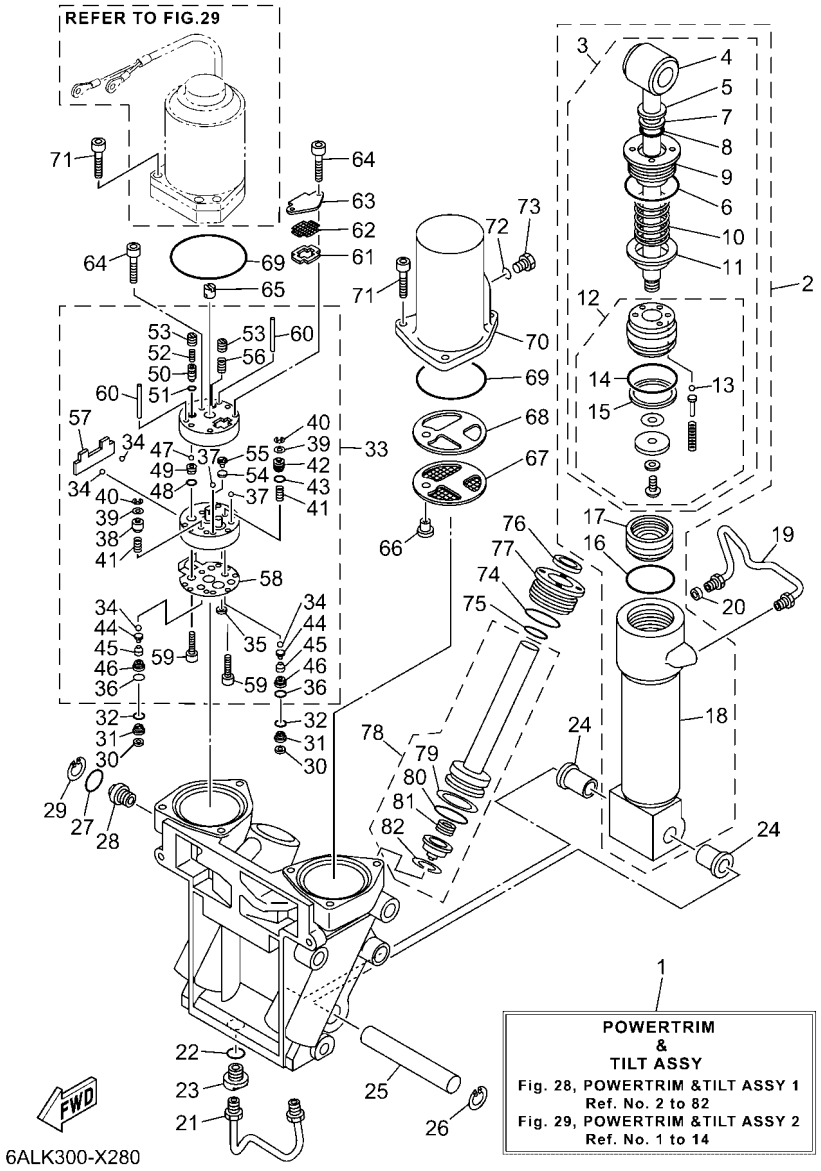

FIG. 28 POWER TRIM & TILT ASSY 1 — COMPONER Y PODER VARILLA 1

REF. NO.	PART NO. CODIGO Nº	DESCRIPTION DESCRIPCION	6S1M	CAR	6S2M			REMARKS OBSERVACIONES
82	61A–43875–10	.RING, SNAP .ANILLO	1	1	1			

FIG. 29 POWER TRIM & TILT ASSY 2 — COMPONER Y PODER VARILLA 2

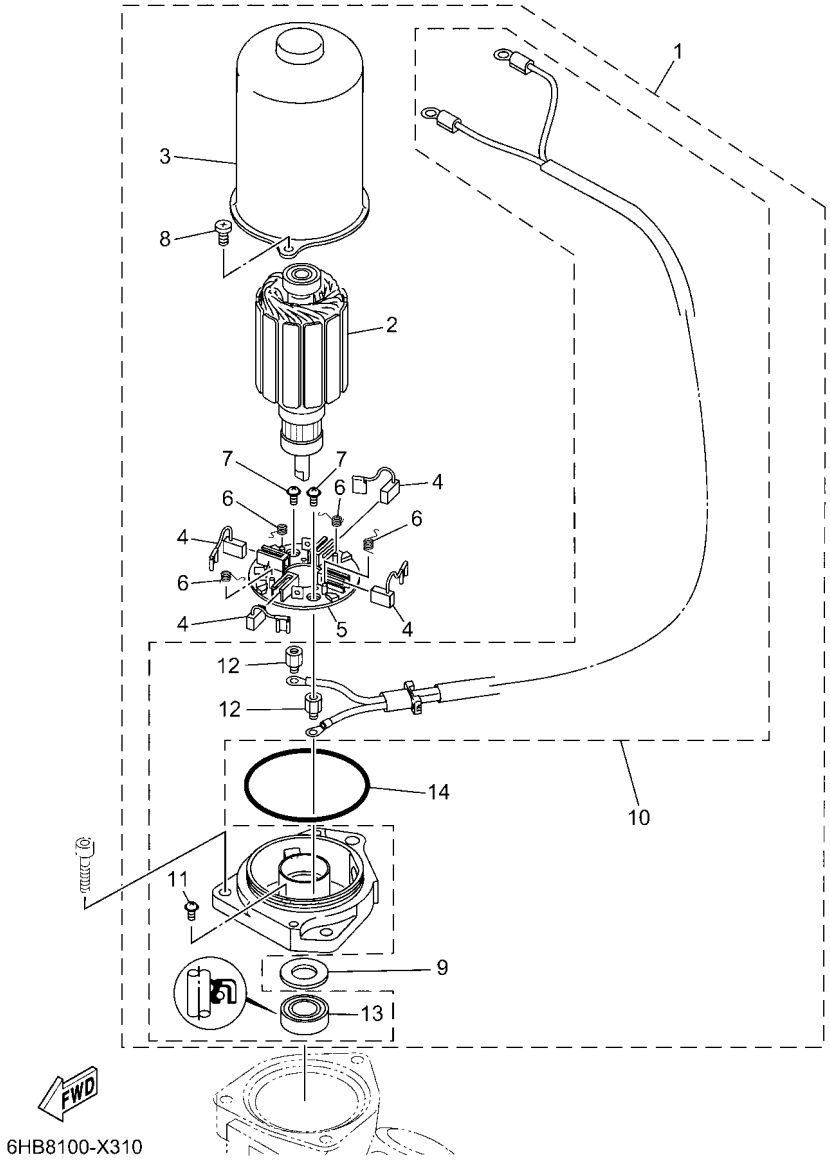

REF. NO.	PART NO. CODIGO Nº	DESCRIPTION DESCRIPCION	6S1M	CAR	6S2M			REMARKS OBSERVACIONES
1	69J–43880–21	MOTOR ASSY MOTOR COMPL.	1	1	1			
2	6ML–43805–00	.ARMATURE ASSY .INDUCIDO COMPL.	1	1	1			
3	6KA–43804–01	.STATOR ASSY .ESTATOR COMPL	1	1	1			
4	6KA–43892–00	.BRUSH 2 .ESCOBILLA 2	4	4	4			
5	6KA–43806–00	.BRUSH HOLDER ASSY .ESCOBILLA SOSTEN COMPL.	1	1	1			
6	6KA–4386K–00	.SPRING, BRUSH .RESORTE, ESCOBILLA	4	4	4			
7	97602–04306	.SCREW, PAN HEAD WITH WASHER .TORNILLO CON RONDONA	2	2	2			
8	6KA–43879–00	.SCREW, WITH WASHER .TORNILLO CON RONDANA	2	2	2			
9	6KA–4387G–00	.WASHER .ARANDELA	1	1	1			
10	69J–43881–20	.FRAME, END .CUADRO EXTERMO	1	1	1			
11	97602–04308	..SCREW, PAN HEAD WITH WASHER ..TORNILLO CON RONDONA	1	1	1			
12	6KA–4388F–00	..SPACER ..ESPACIADOR	2	2	2			
13	6KA–43882–00	..OIL SEAL ..SELLO ACEITE	1	1	1			
14	6KA–43862–00	.O-RING .ANILLO EN O 2	1	1	1			

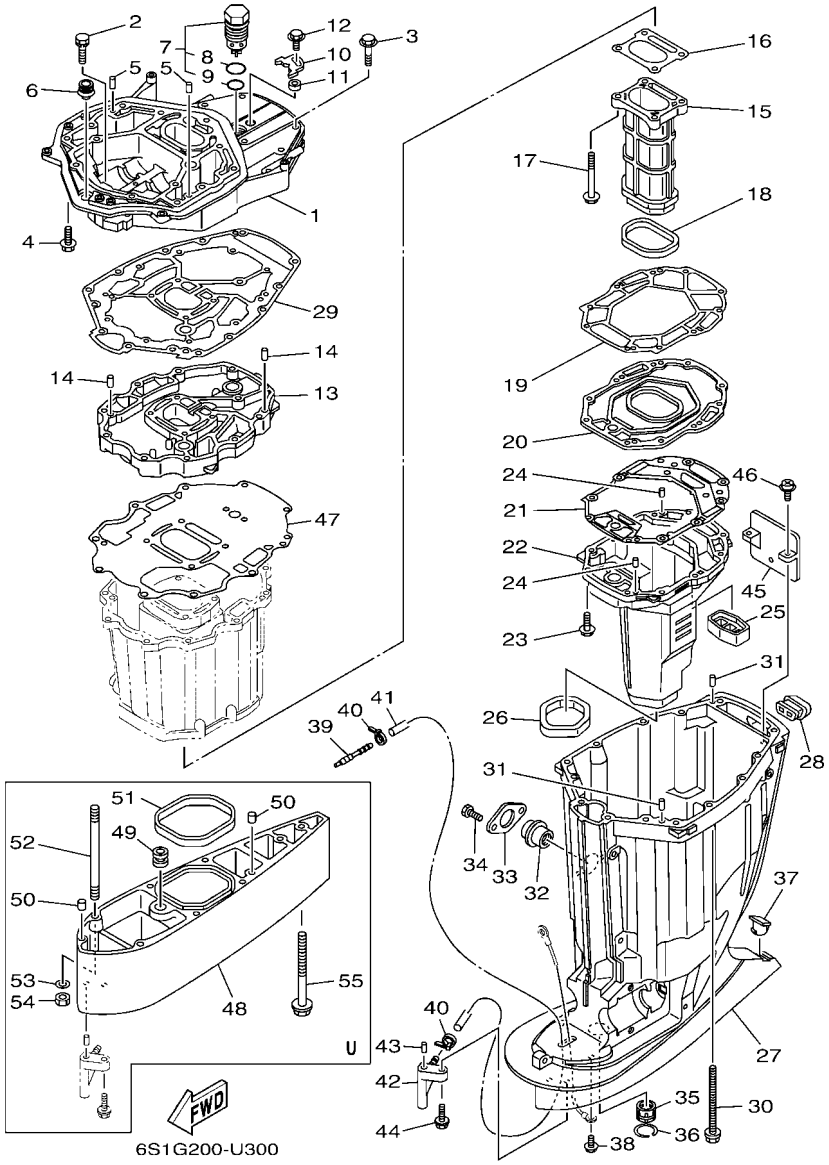

FIG. 30 UPPER CASING — FUNDA SUPERIOR

REF. NO.	PART NO. CODIGO Nº	DESCRIPTION DESCRIPCION	6S1M	CAR	6S2M			REMARKS OBSERVACIONES
1	69J–41137–10–CA	GUIDE, EXHAUST GUIA DE ESCAPE	1	1	1			
2	90119–08182	BOLT, WITH WASHER TORNILLO CON ARANDELA	2	2	2			
3	97E75–10545	BOLT, HEXAGON W/W DEEP RECESS TORNILLO HEXAGONAL CON RONDONA	7	7	7			
4	97E75–10535	BOLT, HEXAGON W/W DEEP RECESS TORNILLO HEXAGONAL CON RONDONA	7	7	7			
5	93608–16M16	PIN, DOWEL PASADOR DE CLAVIJA	2	2	2			
6	6E5–42724–01	GROMMET TAPON	1	1	1			
7	6AW–11371–10	PRESSURE CONTROL VALVE ASSY VALVULA, CONTROL DE PRESION	1	1	1			
8	93210–347A1	.O-RING .ANILLO O	1	1	1			
9	93210–28543	.O-RING .ANILLO O	1	1	1			
10	69J–12233–00	PLATE, GUIDE STOPPER 1 PLACA DE TOPE DE GUIA 1	1	1	1			
11	90387–06037	COLLAR ESPACIADOR	1	1	1			
12	97E95–06520	BOLT, HEXAGON W/W DEEP RECESS TORNILLO HEXAGONAL CON RONDONA	1	1	1			
13	69J–41131–11–CA	MANIFOLD, EXT. 1 TUBO MULTIPLE DE ESCAPE	1	1	1			
14	93608–16M16	PIN, DOWEL PASADOR DE CLAVIJA	2	2	2			
15	69J–41132–20–9S	MANIFOLD, EXHAUST TUBO MULTIPLE DE ESCAPE	1	1	1			
16	6P2–41134–00	GASKET, EXHAUST MANIFOLD EMPAQUE	1	1	1			
17	97E75–08590	BOLT, HEXAGON W/W DEEP RECESS TORNILLO HEXAGONAL CON RONDONA	4	4	4			
18	69J–41138–00	SEAL, EXT. 1 SELLO, ESCAPE 1	1	1	1			
19	69J–41135–A0	GASKET, EXHAUST MANIFOLD EMPAQUE	1	1	1			
20	69J–45181–10–9S	PLATE PLACA	1	1	1			
21	6S1–41136–01	GASKET, EXHAUST MANIFOLD 4 EMPAQUE	1	1	1			
22	69J–14711–00–9S	MUFFLER 1 SILENCIADOR 1	1	1	1			
23	97E75–08535	BOLT, HEXAGON W/W DEEP RECESS TORNILLO HEXAGONAL CON RONDONA	10	10	10			
24	93606–19M23	PIN, DOWEL PASADOR DE CLAVIJA	2	2	2			
25	69J–45127–01	SEAL SELLO DE GOMA	1	1	1			
26	69J–45123–00	GASKET, MUFFLER EMPAQUE SILENCIADOR	1	1	1			
27	69J–45111–10–8D	CASING, UPPER CAJA SUPERIOR	1	1	1			

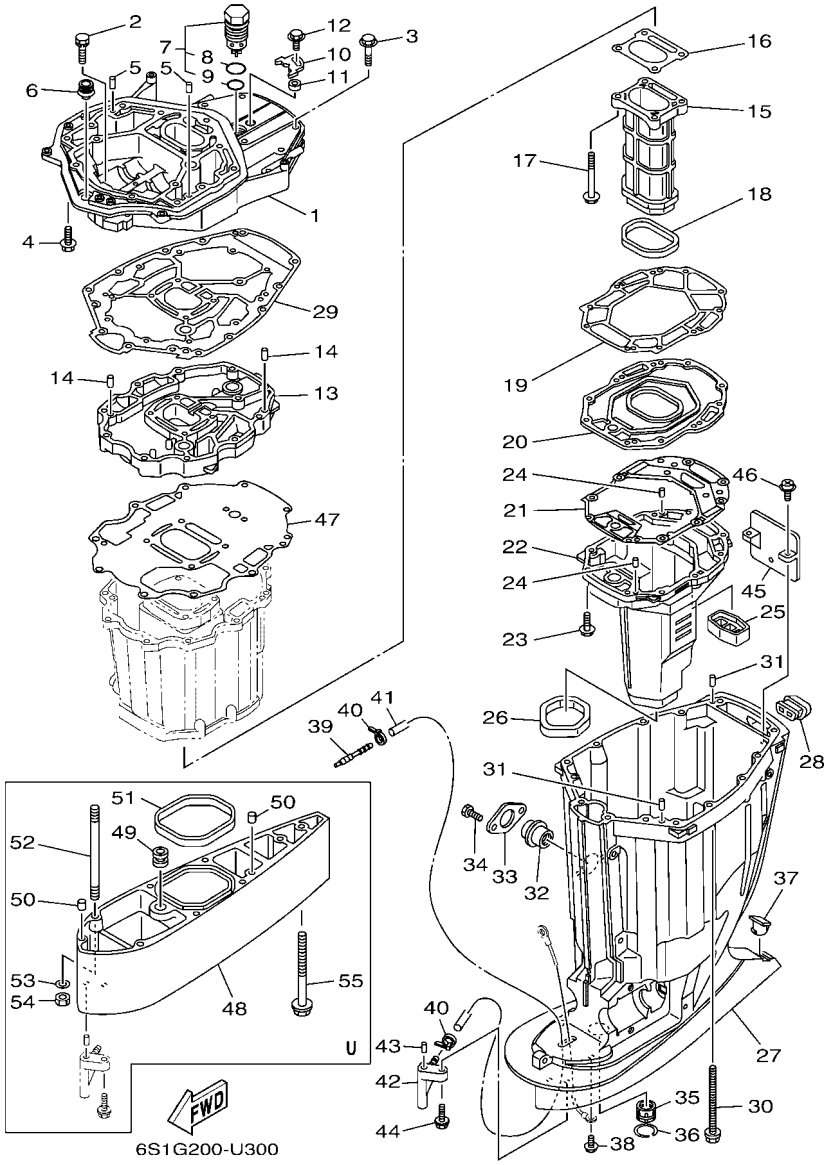

FIG. 30 UPPER CASING — FUNDA SUPERIOR

REF. NO.	PART NO. CODIGO Nº	DESCRIPTION DESCRIPCION	6S1M	CAR	6S2M			REMARKS OBSERVACIONES
28	69J–42769–01	SEAL, RUBBER SELLO DE GOMA	1	1	1			
29	69J–45113–21	GASKET, UPPER CASING EMPAQUE	1	1	1			
30	90119–10007	BOLT, WITH WASHER TORNILLO CON ARANDELA	6	6	6			
31	93608–16M16	PIN, DOWEL PASADOR DE CLAVIJA	2	2	2			
32	69J–15316–01	DAMPER 1 AMORTIGUADOR 1	1	1	1			
33	69J–45152–10	COVER, UPPER CASING 2 CUBIERTA FUNDA SUPERIOR 2	1	1	1			
34	97D95–06012	BOLT, HEXAGON DEEP RECESS TORNILLO HEXAGONAL	2	2	2			
35	69J–45318–01	BUSHING, DRIVE SHAFT BUJE, EJE DE MANDO	1	1	1			
36	93420–36M01	CIRCLIP SEGURO	1	1	1			
37	61A–45155–01	CAP TAPA	1	1	1			
38	95D95–06010	BOLT, FLANGE DEEP RECESS CERROJO, REBORDE HUECO PROFUND	1	1	1			
39	6E5–83558–00	END, NIPPLE EXTREMO DE NIPLE	1	1	1			
40	90465–11M10	CLAMP BRIDA	2	2	2			
41	90445–07010	HOSE (L1330) TUBO (L1330)	1	1	1			X(25.3") X(25.3")
	90445–07012	HOSE (L1457) TUBO (L1457)	1		1			U(30.3") U(30.3")
42	61A–45378–00	NIPPLE, HOSE NIPLE MANGUERA	1	1	1			
43	93606–12019	PIN, DOWEL PASADOR DE CLAVIJA	1	1	1			
44	90119–06309	BOLT, WITH WASHER TORNILLO CON ARANDELA	1	1	1			
45	69J–14624–01	COVER, EXHAUST CUBIERTA ESCAPE	1	1	1			
46	97980–06216	SCREW, WITH WASHER TORNILLO, CON ARANDELA	2	2	2			
47	69J–15312–02	GASKET, OIL PAN EMPAQ BANDEJA DE ACEITE	1	1	1			
48	69J–45211–02–8D	EXTENSION EXTENSION	1		1			U(30.3") U(30.3")
49	6E5–44366–01	DAMPER, WATER SEAL 2 GOMA DEL SELLO DE AGUA 2	1		1			U(30.3") U(30.3")
50	93608–12M05	PIN, DOWEL PASADOR DE CLAVIJA	2		2			U(30.3") U(30.3")
51	69J–45159–00	DAMPER SELLO DE GOMA	1		1			U(30.3") U(30.3")
52	90116–10012	BOLT, STUD ESPARRAGO	6		6			U(30.3") U(30.3")
53	92995–10600	WASHER ARANDELA	6		6			U(30.3") U(30.3")

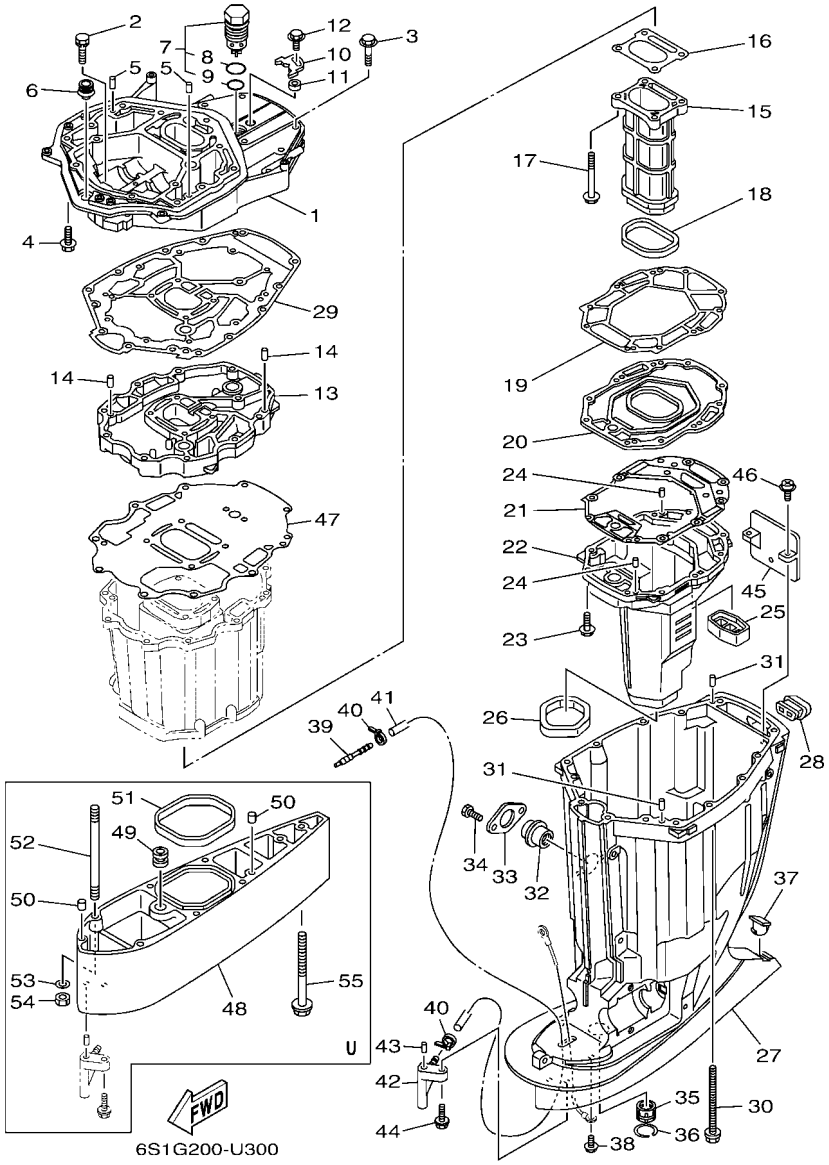

FIG. 30 UPPER CASING — FUNDA SUPERIOR

REF. NO.	PART NO. CODIGO Nº	DESCRIPTION DESCRIPCION	6S1M	CAR	6S2M			REMARKS OBSERVACIONES
54	95380–10600	NUT TUERCA	6		6			U(30.3") U(30.3")
55	90119–10009	BOLT, WITH WASHER TORNILLO CON ARANDELA	1		1			U(30.3") U(30.3")

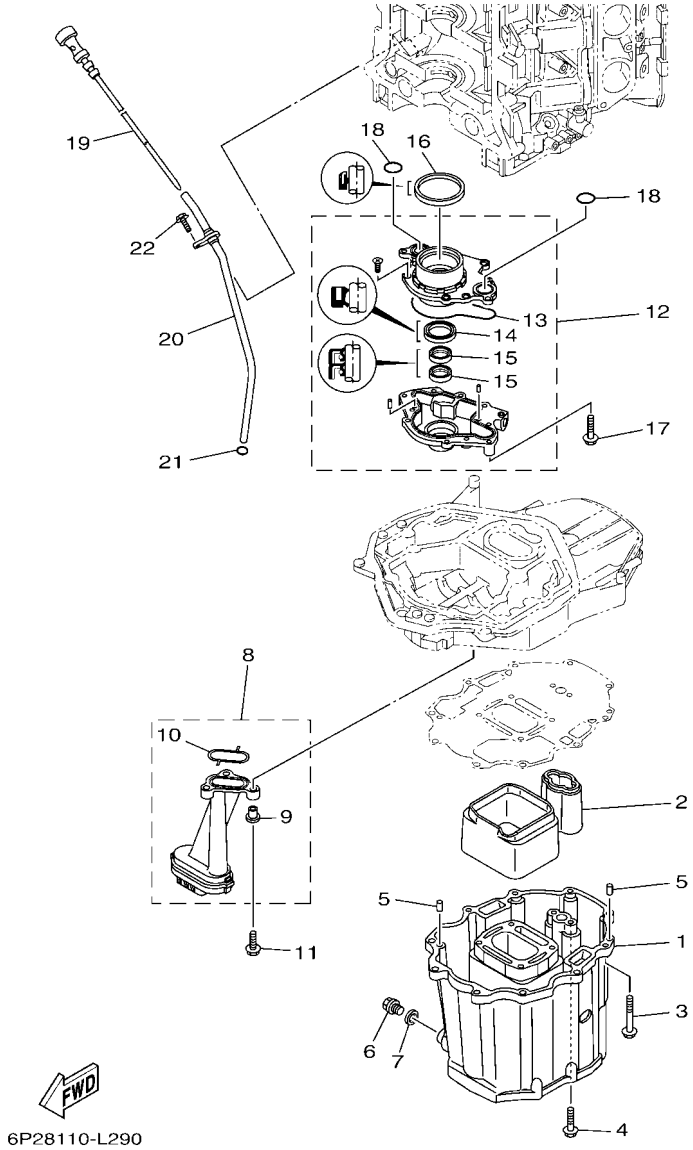

FIG. 31 OIL PAN

OIL PAN

REF. NO.	PART NO. CODIGO Nº	DESCRIPTION DESCRIPCION	6S1M	CAR	6S2M			REMARKS OBSERVACIONES
1	69J–15311–10–CA	OIL PAN BANDEJA DE ACEITE	1	1	1			
2	69J–15761–00	SEAL, RUBBER 1 SELLO DE GOMA 1	1	1	1			
3	97E75–08560	BOLT, HEXAGON W/W DEEP RECESS TORNILLO HEXAGONAL CON RONDONA	10	10	10			
4	97E75–08535	BOLT, HEXAGON W/W DEEP RECESS TORNILLO HEXAGONAL CON RONDONA	2	2	2			
5	93608–16M16	PIN, DOWEL PASADOR DE CLAVIJA	2	2	2			
6	90340–14M06	PLUG, STRAIGHT SCREW TORNILLO, DE DRENAJE	1	1	1			
7	90430–14M09	GASKET JUNTA	1	1	1			
8	69J–13411–01	STRAINER, OIL FILTRO DE ACEITE	1	1	1			
9	90387–06263	.COLLAR .ESPACIADOR	3	3	3			
10	69J–13415–00	.SEAL, OIL STRAINER .SELLO COLADOR ACEITE	1	1	1			
11	95812–06025	BOLT, FLANGE TORNILLO DE REBORDE	3	3	3			
12	6P2–13300–00	OIL PUMP ASSY BOMBA DE ACEITE COMPLETA	1	1	1			
13	69J–13329–01	.GASKET, PUMP COVER .EMPAQUE TAPA DE BOMBA	1	1	1			
14	6AW–13119–00	.OIL SEAL .SELLO ACEITE	1	1	1			
15	69J–13631–00	.OIL SEAL .SELLO ACEITE	2	2	2			
16	69J–11355–00	SEAL, CYLINDER 1 RETEN ACEITE CILINDRO 1	1	1	1			
17	97E75–06540	BOLT, HEXAGON W/W DEEP RECESS TORNILLO HEXAGONAL CON RONDONA	4	4	4			
18	93210–25552	O-RING ANILLO O	2	2	2			
19	6P2–15362–10	PLUG, OIL LEVEL TAPON DEL NIVEL DE ACEITE	1	1	1			
20	6P2–15377–10	GUIDE, INLET GUIA DE ENTRADA	1	1	1			
21	93210–19MJ3	O-RING ANILLO O	1	1	1			
22	95D95–06016	BOLT, FLANGE DEEP RECESS CERROJO, REBORDE HUECO PROFUND	1	1	1			

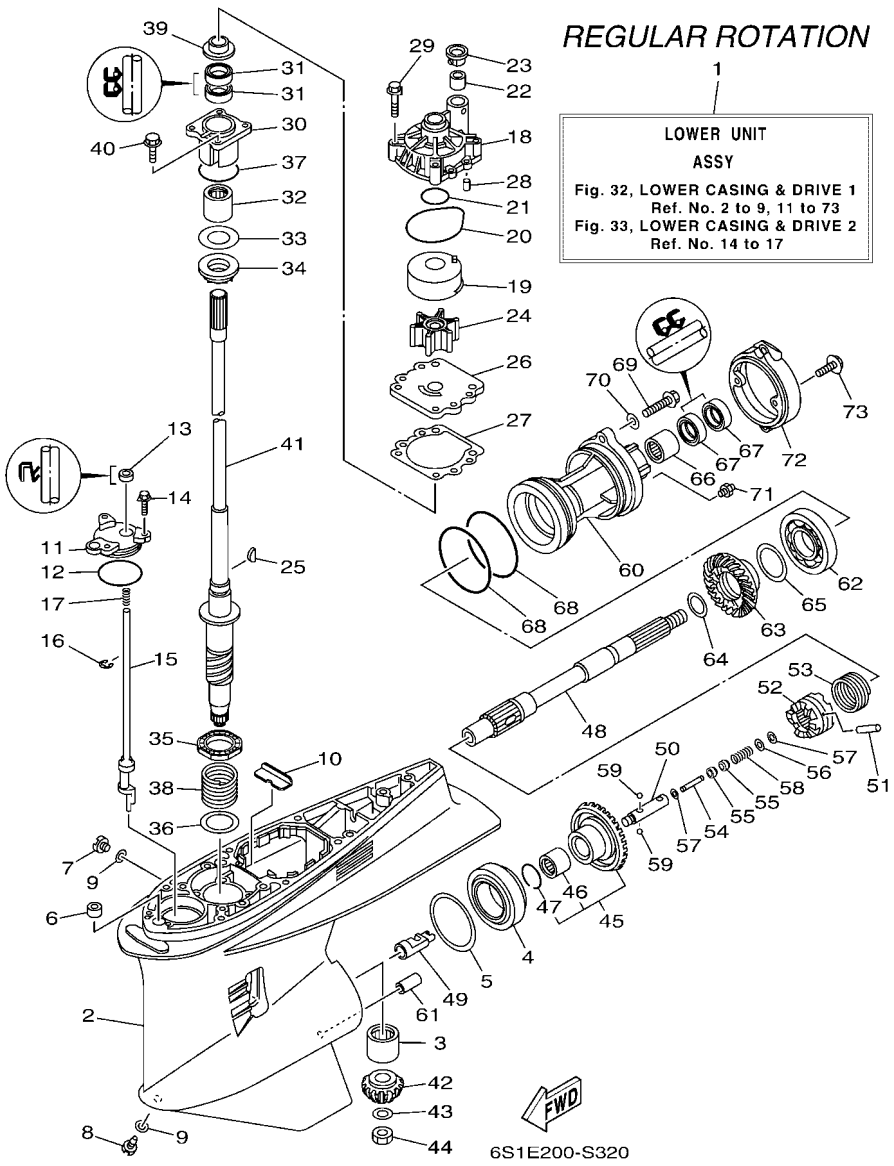

FIG. 32 LOWER CASING & DRIVE 1 — IMPULSOR E INFERIOR 1

REF. NO.	PART NO. CODIGO Nº	DESCRIPTION DESCRIPCION	6S1M	CAR	6S2M			REMARKS OBSERVACIONES
1	6FJ–45300–03–8D	LOWER UNIT ASSY CONJUNTO UNIDAD INFERIOR	1	1				X(25.3"),RH X(25.3"),RH
	6FJ–45300–12–8D	LOWER UNIT ASSY CONJUNTO UNIDAD INFERIOR	1					U(30.3"),RH U(30.3"),RH
2	6DX–45301–00–8D	CASING, LOWER FUNDA INFERIOR COMPLETA	1	1				
3	93311–83280	BEARING COJINETE DE RODILLOS	1	1				
4	93332–000W1	BEARING COJINETE	1	1				
5	61A–45567–00	SHIM (T:0.10MM) LAINA (T:0.10MM)	1	1				UR UR
	61A–45567–10	SHIM (T:0.12MM) LAINA (T:0.12MM)	1	1				UR UR
	61A–45567–20	SHIM (T:0.15MM) LAINA (T:0.15MM)	1	1				UR UR
	61A–45567–30	SHIM (T:0.18MM) LAINA (T:0.18MM)	1	1				UR UR
	61A–45567–40	SHIM (T:0.30MM) LAINA (T:0.30MM)	1	1				UR UR
	61A–45567–50	SHIM (T:0.40MM) LAINA (T:0.40MM)	1	1				UR UR
	61A–45567–60	SHIM (T:0.50MM) LAINA (T:0.50MM)	1	1				UR UR
6	663–44366–01	DAMPER, WATER SEAL 2 GOMA DEL SELLO DE AGUA 2	1	1				
7	90340–08002	PLUG, STRAIGHT SCREW TORNILLO, DE DRENAJE	1	1				
8	688–45341–10	PLUG, DRAIN TAPON, DREN	1	1				
9	90430–08003	GASKET JUNTA	2	2				
10	61A–45376–00	GUIDE, SEAL DAMPER GUIA DE SELLO GOMA	1	1				
11	61A–45321–01	PLATE PLACA	1	1				
12	93210–64488	O-RING ANILLO O	1	1				
13	93106–09014	OIL SEAL SELLO ACEITE	1	1				
14	90119–06286	BOLT, WITH WASHER TORNILLO CON ARANDELA	3	3				
15	69J–44150–00	SHIFT CAM ASSY CONJUNTO EJE LEVA COMPL.	1	1				
16	99001–08600	CIRCLIP PRESILLA REDONDA	1	1				
17	90501–11M10	SPRING, COMPRESSION RESORTE DE COMPRESION	1	1				
18	61A–44311–01	HOUSING, WATER PUMP CAJA BOMBA DE AGUA	1	1				
19	6R3–44322–42	INSERT, CARTRIDGE CARTUCHO	1	1				FOR CHROMATE FOR CHROMATE
20	93210–86M38	O-RING ANILLO O	1	1				

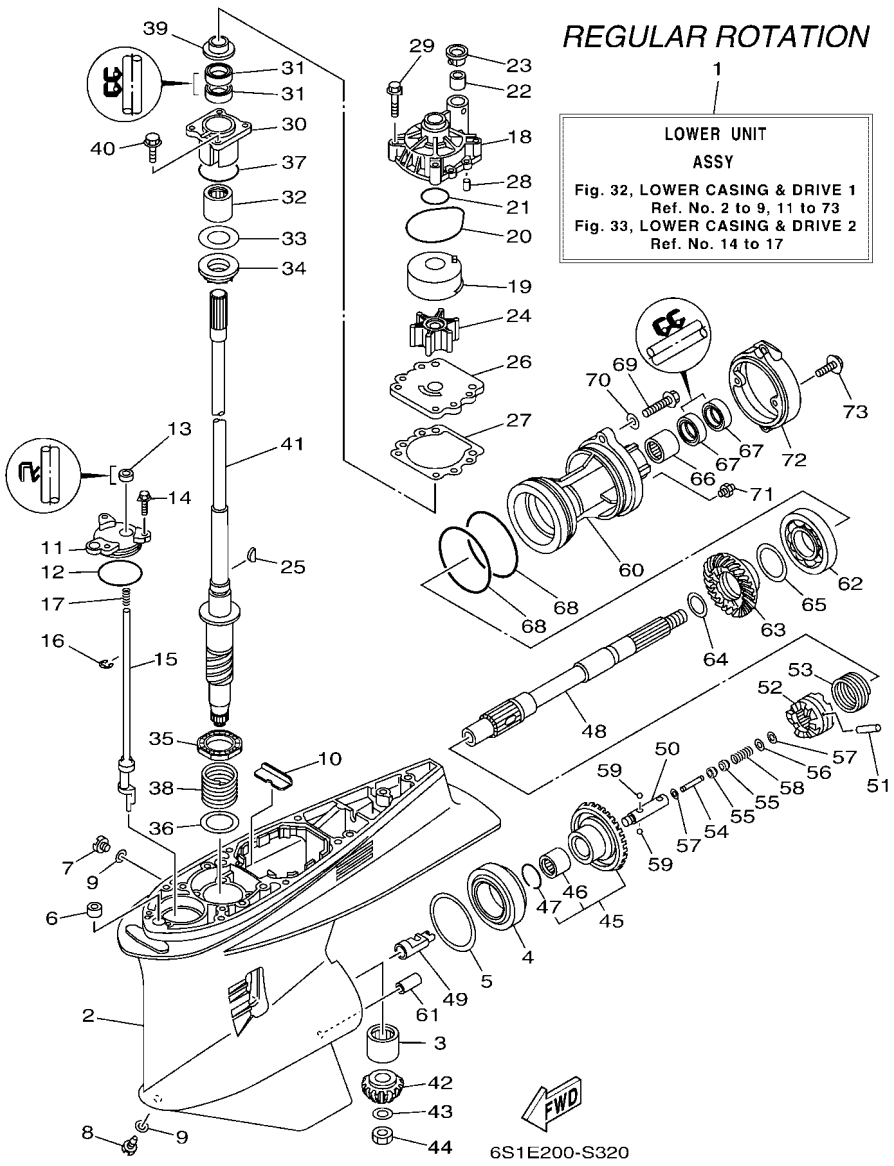

FIG. 32 LOWER CASING & DRIVE 1 — IMPULSOR E INFERIOR 1

REF. NO.	PART NO. CODIGO Nº	DESCRIPTION DESCRIPCION	6S1M	CAR	6S2M			REMARKS OBSERVACIONES
21	93210–37160	O-RING ANILLO O	1	1				
22	6E5–44365–01	DAMPER, WATER SEAL 1 HULE DE SELLO DE AGUA 1	1	1				
23	6E5–44312–00	COVER, WATER PUMP HOUSING CUBIERTA CAJA BOMBA DE AGUA	1	1				
24	6E5–44352–01	IMPELLER IMPULSOR	1	1				
25	90280–04M05	KEY, WOODRUFF CUNA WOODRUFF	1	1				
26	6G5–44323–41	OUTER PLATE, CARTRIDGE PLACA EXTERIOR DEL CARTUCHO	1	1				FOR CHROMATE FOR CHROMATE
27	6E5–44315–A0	GASKET, WATER PUMP EMPAQUE	1	1				
28	93606–12019	PIN, DOWEL PASADOR DE CLAVIJA	2	2				
29	90119–08191	BOLT, WITH WASHER TORNILLO CON ARANDELA	4	4				
30	61A–45331–00–9S	HOUSING, BEARING CAJA DE COJINETE	1	1				
31	93101–28019	OIL SEAL SELLO ACEITE	2	2				
32	93317–330U2	BEARING COJINETE	1	1				
33	61A–45587–00	SHIM (T:0.10MM) LAINA (T:0.10MM)	1	1				UR UR
	61A–45587–10	SHIM (T:0.12MM) LAINA (T:0.12MM)	1	1				UR UR
	61A–45587–20	SHIM (T:0.15MM) LAINA (T:0.15MM)	1	1				UR UR
	61A–45587–30	SHIM (T:0.18MM) LAINA (T:0.18MM)	1	1				UR UR
	61A–45587–40	SHIM (T:0.30MM) LAINA (T:0.30MM)	1	1				UR UR
	61A–45587–50	SHIM (T:0.40MM) LAINA (T:0.40MM)	1	1				UR UR
	61A–45587–60	SHIM (T:0.50MM) LAINA (T:0.50MM)	1	1				UR UR
34	93341–93020	BEARING COJINETES CON RODAMIENTOS	1	1				
35	93341–34019	BEARING COJINETES CON RODAMIENTOS	1	1				
36	90201–42014	WASHER, PLATE ARANDELA PLANA	1	1				
37	93210–55M14	O-RING ANILLO O	1	1				
38	90501–450A2	SPRING, COMPRESSION RESORTE DE COMPRESION	1	1				
39	6E5–45344–00	COVER, OIL SEAL CUBIERTA SELLO ACEITE	1	1				
40	97E95–08525	BOLT, HEXAGON W/W DEEP RECESS TORNILLO HEXAGONAL CON RONDONA	4	4				
41	6P2–45501–01	DRIVE SHAFT COMP. EJE DE MANDO COMPL.	1	1				X(25.3") X(25.3")

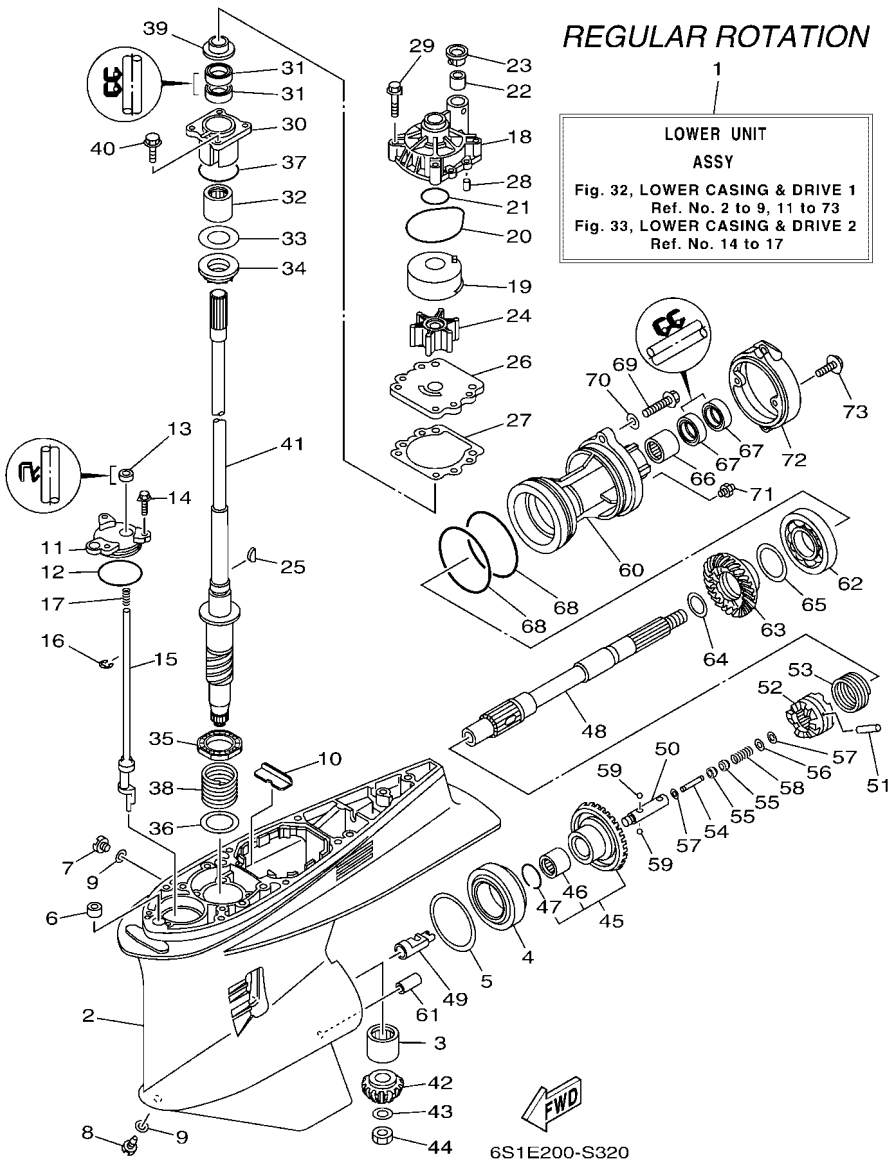

FIG. 32 LOWER CASING & DRIVE 1 — IMPULSOR E INFERIOR 1

REF. NO.	PART NO. CODIGO Nº	DESCRIPTION DESCRIPCION	6S1M	CAR	6S2M			REMARKS OBSERVACIONES
41	6P2–45501–11	DRIVE SHAFT COMP. EJE DE MANDO COMPL.	1					U(30.3") U(30.3")
42	6FJ–45551–00	PINION (13T) PINON (13T)	1	1				
43	90201–16M00	WASHER, PLATE ARANDELA PLANA	1	1				
44	90170–16M19	NUT TUERCA	1	1				
45	6FJ–45560–00	GEAR 1 (26T) ENGRANAJE 1 (26T)	1	1				
46	93317–62891	.BEARING .COJINETE	1	1				
47	93450–37097	.CIRCLIP .SEGURO	1	1				
48	69J–45611–00	SHAFT, PROPELLER EJE PROPUSOR	1	1				
49	61A–45641–02	SHIFTER CAMBIO	1	1				
50	61A–45634–01	SLIDE, SHIFT DESLIZADOR, CAMBIO	1	1				
51	61A–45632–00	PIN, CROSS PASADOR TRANSVERSAL	1	1				
52	69J–45631–00	CLUTCH, DOG EMBRAGUE DE GARRA	1	1				
53	61A–45633–00	RING, CROSS PIN ANILLO DE PASADOR	1	1				
54	6H1–45668–00	SHAFT, FREE 1 EJE 1	1	1				
55	61A–45635–00	PLUNGER, SHIFT EMBOLO DE CAMBIO	2	2				
56	90201–02M00	WASHER, PLATE ARANDELA PLANA	1	1				
57	90183–02M03	NUT, SPRING TUERCA DE RESORTE	2	2				
58	90501–10M77	SPRING, COMPRESSION RESORTE DE COMPRESION	1	1				
59	93501–04011	BALL BOLA	2	2				
60	6DX–45332–00	HOUSING, BEARING CAJA BALERO 2	1	1				
61	99590–10114	PIN, DOWEL PASADOR, DE ESPIGA	1	1				
62	93306–210U0	BEARING COJINETE	1	1				
63	6FJ–45571–00	GEAR 2 (26T) ENGRANAJE 2 (26T)	1	1				
64	6P2–45578–00	SHIM (T:1.80MM) LAINA (T:1.80MM)	1	1				UR UR
	6P2–45578–10	SHIM (T:1.90MM) LAINA (T:1.90MM)	1	1				UR UR
	6P2–45578–20	SHIM (T:2.00MM) LAINA (T:2.00MM)	1	1				UR UR
	6P2–45578–30	SHIM (T:2.10MM) LAINA (T:2.10MM)	1	1				UR UR

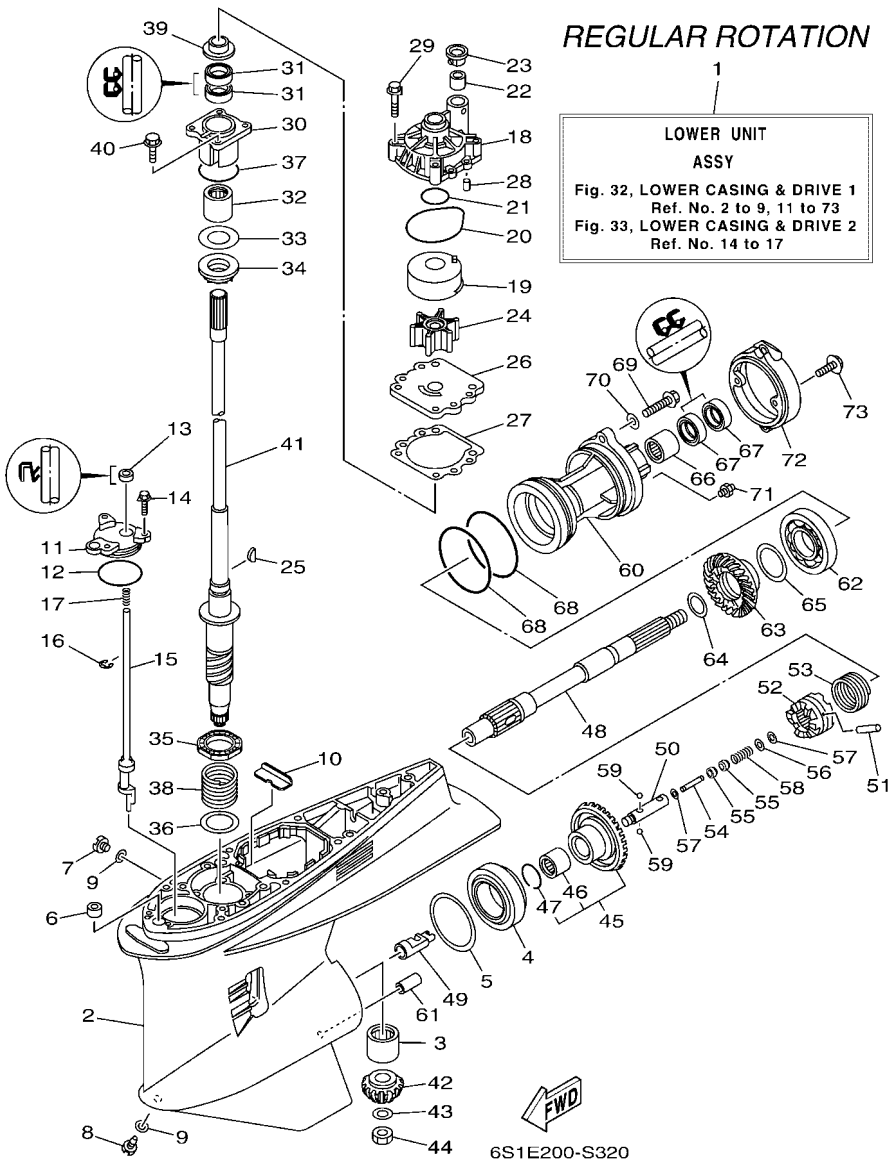

FIG. 32 LOWER CASING & DRIVE 1 — IMPULSOR E INFERIOR 1

REF. NO.	PART NO. CODIGO Nº	DESCRIPTION DESCRIPCION	6S1M	CAR	6S2M			REMARKS OBSERVACIONES
64	6P2–45578–40	SHIM (T:2.20MM) LAINA (T:2.20MM)	1	1				UR UR
65	61A–45577–00	SHIM (T:0.10MM) LAINA (T:0.10MM)	1	1				UR UR
	61A–45577–10	SHIM (T:0.12MM) LAINA (:0.12MM)	1	1				UR UR
	61A–45577–20	SHIM (T:0.15MM) LAINA (T:0.15MM)	1	1				UR UR
	61A–45577–30	SHIM (T:0.18MM) LAINA (T:0.18MM)	1	1				UR UR
	61A–45577–40	SHIM (T:0.30MM) LAINA (T:0.30MM)	1	1				UR UR
	61A–45577–50	SHIM (T:0.40MM) LAINA (T:0.40MM)	1	1				UR UR
	61A–45577–60	SHIM (T:0.50MM) LAINA (T:0.50MM)	1	1				UR UR
66	93315–43064	BEARING COJINETE DE RODILLOS	1	1				
67	93101–30030	OIL SEAL SELLO ACEITE	2	2				
68	93211–04384	O-RING ANILLO O	2	2				
69	90105–08049	BOLT, FLANGE TORNILLO	2	2				
70	90201–08023	WASHER, PLATE ARANDELA PLANA	2	2				
71	93700–09M00	NIPPLE, GREASE BOQUILLA DE ENGRASAR	1	1				
72	6D0–45361–00–8D	CAP, LOWER CASING FUNDA INFERIOR	1	1				
73	97E95–08520	BOLT, HEXAGON W/W DEEP RECESS TORNILLO HEXAGONAL CON RONDONA	2	2				

FIG. 33 LOWER CASING & DRIVE 2 — IMPULSOR E INFERIOR 2

REGULAR ROTATION

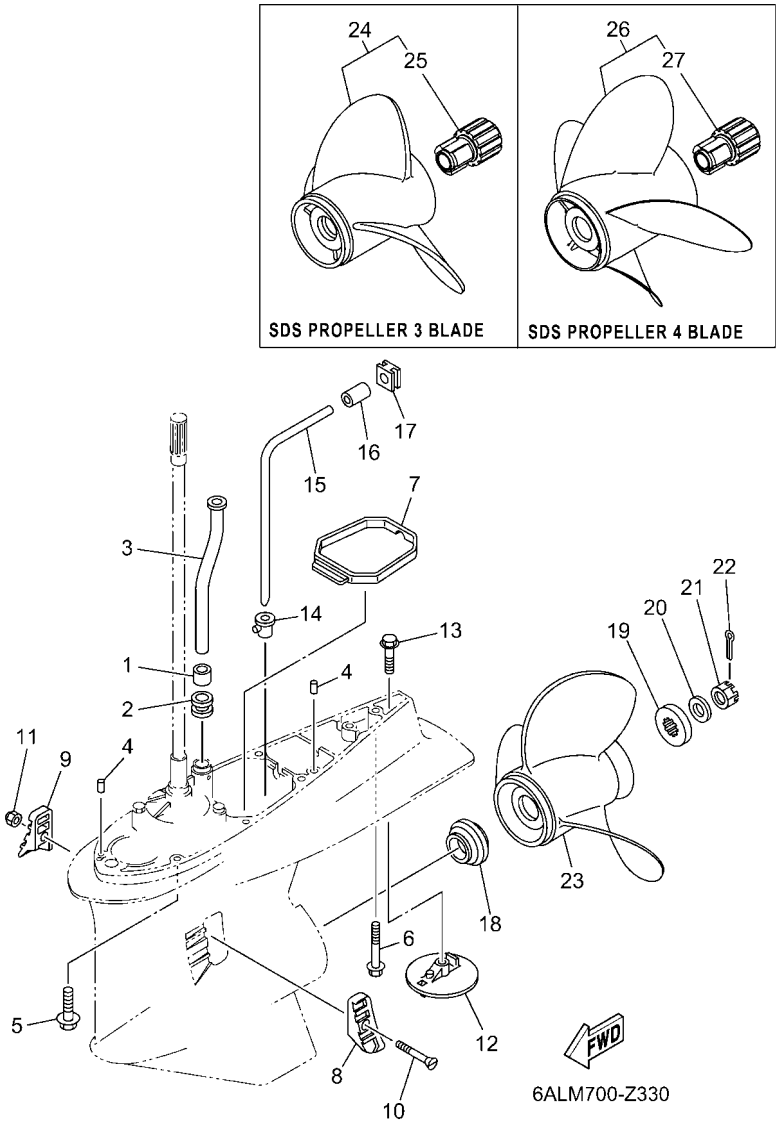

REF. NO.	PART NO. CODIGO Nº	DESCRIPTION DESCRIPCION	6S1M	CAR	6S2M			REMARKS OBSERVACIONES
1	6E5–44365–01	DAMPER, WATER SEAL 1 HULE DE SELLO DE AGUA 1	1	1				
2	6E5–44366–01	DAMPER, WATER SEAL 2 GOMA DEL SELLO DE AGUA 2	1	1				
3	6S1–44361–02	TUBE, WATER 1 TUBO DE AGUA 1	1	1				X(25.3") X(25.3")
	6S1–44361–12	TUBE, WATER 1 TUBO DE AGUA 1	1					U(30.3") U(30.3")
4	93608–12M05	PIN, DOWEL PASADOR DE CLAVIJA	2	2				
5	97E95–10645	BOLT, HEXAGON W/W DEEP RECESS TORNILLO HEXAGONAL CON RONDONA	7	7				X(25.3") X(25.3")
6	90119–10072	BOLT, WITH WASHER TORNILLO CON ARANDELA	1	1				X(25.3") X(25.3")
	90119–10008	BOLT, WITH WASHER TORNILLO CON ARANDELA	1					U(30.3") U(30.3")
7	6D0–45375–01	DAMPER, SEAL GOMA DE SELLO	1	1				
8	61A–45214–11	COVER, WATER INLET 1 CUBIERTA, ENTRADA AGUA 1	1	1				
9	61A–45215–11	COVER, WATER INLET 2 CUBIERTA, ENTRADA AGUA 2	1	1				
10	90152–05003	SCREW, COUNTERSUNK TORNILLO EMBUTIDO	1	1				
11	90185–05002	NUT, NYLON TUERCA AUTOBLOCANTE	1	1				
12	6CE–45373–00	ANODE ANODO	1	1				
13	90105–10M00	BOLT, FLANGE TORNILLO	1	1				
14	6D0–44367–00	DAMPER, WATER SEAL 3 GOMA DEL SELLO DE AGUA 3	1	1				
15	6D0–44362–01	TUBE, WATER 2 TUBO DE AGUA 2	1	1				
16	6D0–44365–00	DAMPER, WATER SEAL 1 HULE DE SELLO DE AGUA 1	1	1				
17	6D0–44366–01	DAMPER, WATER SEAL 2 GOMA DEL SELLO DE AGUA 2	1	1				
18	69J–45987–00	SPACER 1 ESPACIADOR 1	1	1				
19	688–45997–01	SPACER 2 ESPACIADOR 2	1	1				
20	92990–18200	WASHER ARANDELA PLANA	1	1				
21	90171–18M04	NUT, CASTLE TUERCA ENTALLADA	1	1				
22	91490–40030	PIN. COTTER CHAVETA	1	1				
23	6G5–45941–00	PROPELLER (3X15-1/4"X15"-M) PROPELA (3X15-1/4"X15"-M)	1	1				UR UR
	6G5–45952–00	PROPELLER (3X14-5/8"X16"-M) PROPELA (3X14-5/8"X16"-M)	1	1				UR UR
	6G5–45947–01	PROPELLER (3X14-1/2"X17"-M) PROPELA (3X14-1/2"X17"-M)	1	1				UR UR

FIG. 33 LOWER CASING & DRIVE 2 — IMPULSOR E INFERIOR 2

REGULAR ROTATION

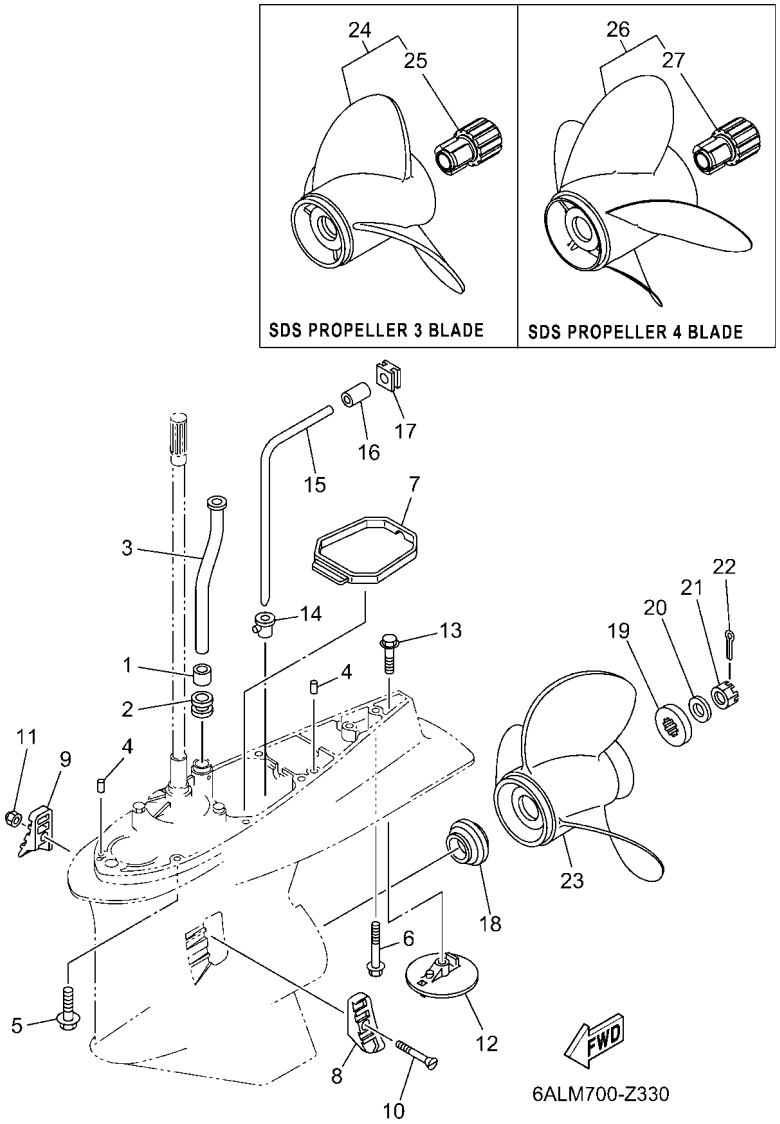

REF. NO.	PART NO. CODIGO Nº	DESCRIPTION DESCRIPCION	6S1M	CAR	6S2M			REMARKS OBSERVACIONES
23	6G5–45945–01	PROPELLER (3X14"X19"-M)	1	1				UR
		PROPELA (3X14"X19"-M)						UR
	6G5–45943–01	PROPELLER (3X13-3/4"X21"-M)	1	1				UR
		PROPELA (3X13-3/4"X21"-M)						UR
	6G5–45949–00	PROPELLER (3X13-1/2"X23"-M)	1	1				UR
		PROPELA (3X13-1/2"X23"-M)						UR
	6G5–45932–00	PROPELLER (3X15-3/4"X13"-M)	1	1				UR
		PROPELA (3X15-3/4"X13"-M)						UR
	6G5–45970–02	PROPELLER (3X15-1/4"X15"-M)	1	1				UR
		PROPELA (3X15-1/4"X15"-M)						UR
	6G5–45978–03	PROPELLER (3X13-3/4"X17"-M2)	1	1				UR
		PROPELA (3X13-3/4"X17"-M2)						UR
	6G5–45974–03	PROPELLER (3X13-3/4"X19"-M2)	1	1				UR
		PROPELA (3X13-3/4"X19"-M2)						UR
	6G5–45972–02	PROPELLER (3X13-3/4"X21"-M)	1	1				UR
		PROPELA (3X13-3/4"X21"-M)						UR
	6G5–45976–01	PROPELLER (3X13-3/8"X23"-M)	1	1				UR
		PROPELA (3X13-3/8"X23"-M)						UR
	6G5–45930–00	PROPELLER (3X13-3/8"X25"-M)	1	1				UR
		PROPELA (3X13-3/8"X25"-M)						UR
	61A–45978–00	PROPELLER (3X15"X17"-T)	1	1				UR
		PROPELA (3X15"X17"-T)						UR
	61A–45974–00	PROPELLER (3X14-1/2"X19"-T)	1	1				UR
		PROPELA (3X14-1/2"X19"-T)						UR
	61A–45972–00	PROPELLER (3X14-1/2"X21"-T)	1	1				UR
		PROPELA (3X14-1/2"X21"-T)						UR
	6R4–45976–A0	PROPELLER (3X14-1/2"X15"-M)	1	1				UR
		PROPELA (3X14-1/2"X15"-M)						UR
	6R4–45978–A0	PROPELLER (3X15-1/4"X17"-M)	1	1				UR
		PROPELA (3X15-1/4"X17"-M)						UR
	6R4–45970–A1	PROPELLER (3X15-1/4"X19"-M)	1	1				UR
		PROPELA (3X15-1/4"X19"-M)						UR
	6R4–45972–A0	PROPELLER (3X14-7/8"X21"-M)	1	1				UR
		PROPELA (3X14-7/8"X21"-M)						UR
	6R4–45974–A0	PROPELLER (3X14-1/2"X23"-M)	1	1				UR
		PROPELA (3X14-1/2"X23"-M)						UR
24	60H–45970–00	PROPELLER (3X14-1/4"X14"-M)	1	1				UR SDS 3 BLADE
		PROPELA (3X14-1/4"X14"-M)						UR SDS 3 BLADE
	60H–45972–00	PROPELLER (3X14-1/4"X16"-M)	1	1				UR SDS 3 BLADE
		PROPELA (3X14-1/4"X16"-M)						UR SDS 3 BLADE
	60H–45974–00	PROPELLER (3X14-1/4"X18"-M)	1	1				UR SDS 3 BLADE
		PROPELA (3X14-1/4"X18"-M)						UR SDS 3 BLADE
	60H–45976–00	PROPELLER (3X14-1/4"X20"-M)	1	1				UR SDS 3 BLADE
		PROPELA (3X14-1/4"X20"-M)						UR SDS 3 BLADE
	60H–45978–00	PROPELLER (3X14-1/4"X22"-M)	1	1				UR SDS 3 BLADE
		PROPELA (3X14-1/4"X22"-M)						UR SDS 3 BLADE
	68F–45932–20	PROPELLER (3X14-1/2"X13"-M)	1	1				UR SDS 3 BLADE
		PROPELA (3X14-1/2"X13"-M)						UR SDS 3 BLADE
	68F–45930–20	PROPELLER (3X14-1/2"X14"-M)	1	1				UR SDS 3 BLADE
		PROPELA (3X14-1/2"X14"-M)						UR SDS 3 BLADE
	68F–45970–20	PROPELLER (3X14-1/2"X15"-M)	1	1				UR SDS 3 BLADE
		PROPELA (3X14-1/2"X15"-M)						UR SDS 3 BLADE
	68F–45972–20	PROPELLER (3X14-1/4"X17"-M)	1	1				UR SDS 3 BLADE
		PROPELA (3X14-1/4"X17"-M)						UR SDS 3 BLADE

FIG. 33 LOWER CASING & DRIVE 2 — IMPULSOR E INFERIOR 2

REGULAR ROTATION

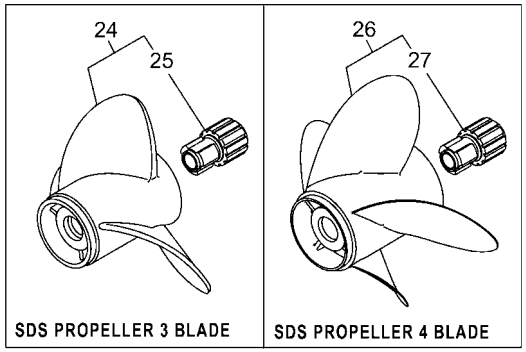

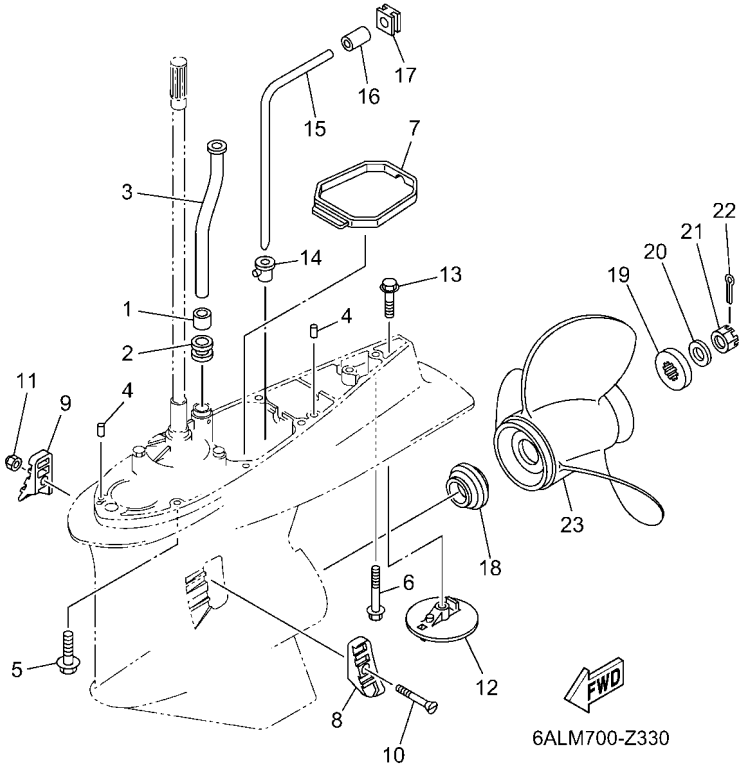

REF. NO.	PART NO. CODIGO Nº	DESCRIPTION DESCRIPCION	6S1M	CAR	6S2M			REMARKS OBSERVACIONES
24	68F–45978–20	PROPELLER (3X14-1/4"X18"-M) PROPELA (3X14-1/4"X18"-M)	1	1				UR SDS 3 BLADE UR SDS 3 BLADE
	68F–45974–20	PROPELLER (3X13-3/4"X19"-M) PROPELA (3X13-3/4"X19"-M)	1	1				UR SDS 3 BLADE UR SDS 3 BLADE
	68F–45976–20	PROPELLER (3X13-3/4"X21"-M) PROPELA (3X13-3/4"X21"-M)	1	1				UR SDS 3 BLADE UR SDS 3 BLADE
	6CE–45930–20	PROPELLER (3X15-3/4"X13"-T) PROPELA (3X15-3/4"X13"-T)	1	1				UR SDS 3 BLADE UR SDS 3 BLADE
	6CE–45976–20	PROPELLER (3X15-3/4"X15"-T) PROPELA (3X15-3/4"X15"-T)	1	1				UR SDS 3 BLADE UR SDS 3 BLADE
	6CE–45938–20	PROPELLER (3X15-1/2"X16"-T) PROPELA (3X15-1/2"X16"-T)	1	1				UR SDS 3 BLADE UR SDS 3 BLADE
	6CE–45978–20	PROPELLER (3X15-1/2"X17"-T) PROPELA (3X15-1/2"X17"-T)	1	1				UR SDS 3 BLADE UR SDS 3 BLADE
	6CE–45934–20	PROPELLER (3X15-1/4"X18"-T) PROPELA (3X15-1/4"X18"-T)	1	1				UR SDS 3 BLADE UR SDS 3 BLADE
	6CE–45970–20	PROPELLER (3X15-1/4"X19"-T) PROPELA (3X15-1/4"X19"-T)	1	1				UR SDS 3 BLADE UR SDS 3 BLADE
	6CE–45932–20	PROPELLER (3X15"X20"-T) PROPELA (3X15"X20"-T)	1	1				UR SDS 3 BLADE UR SDS 3 BLADE
	6CE–45972–20	PROPELLER (3X15"X21"-T) PROPELA (3X15"X21"-T)	1	1				UR SDS 3 BLADE UR SDS 3 BLADE
	6CE–45936–20	PROPELLER (3X14-3/4"X22"-T) PROPELA (3X14-3/4"X22"-T)	1	1				UR SDS 3 BLADE UR SDS 3 BLADE
	6CE–45974–20	PROPELLER (3X14-3/4"X23"-T) PROPELA (3X14-3/4"X23"-T)	1	1				UR SDS 3 BLADE UR SDS 3 BLADE
	6CE–45D72–20	PROPELLER (3X14-3/4X24-T) PROPELA (3X14-3/4X24-T)	1	1				UR SDS 3 BLADE UR SDS 3 BLADE
	6CE–45D74–20	PROPELLER (3X14-3/4X25-T) PROPELA (3X14-3/4X25-T)	1	1				UR SDS 3 BLADE UR SDS 3 BLADE
25	6CE–45C81–10	.DAMPER RUBBER, PROPELLER 1 .AMORTIGUADOR PROPELA 1	1	1				
26	6CE–45B70–20	PROPELLER (4X15"X21"-T) PROPELA (4X15"X21"-T)	1	1				UR SDS 4 BLADE UR SDS 4 BLADE
	6CE–45B72–20	PROPELLER (4X15"X22"-T) PROPELA (4X15"X22"-T)	1	1				UR SDS 4 BLADE UR SDS 4 BLADE
	6CE–45B74–20	PROPELLER (4X15"X23"-T) PROPELA (4X15"X23"-T)	1	1				UR SDS 4 BLADE UR SDS 4 BLADE
27	6CE–45C81–10	.DAMPER RUBBER, PROPELLER 1 .AMORTIGUADOR PROPELA 1	1	1				

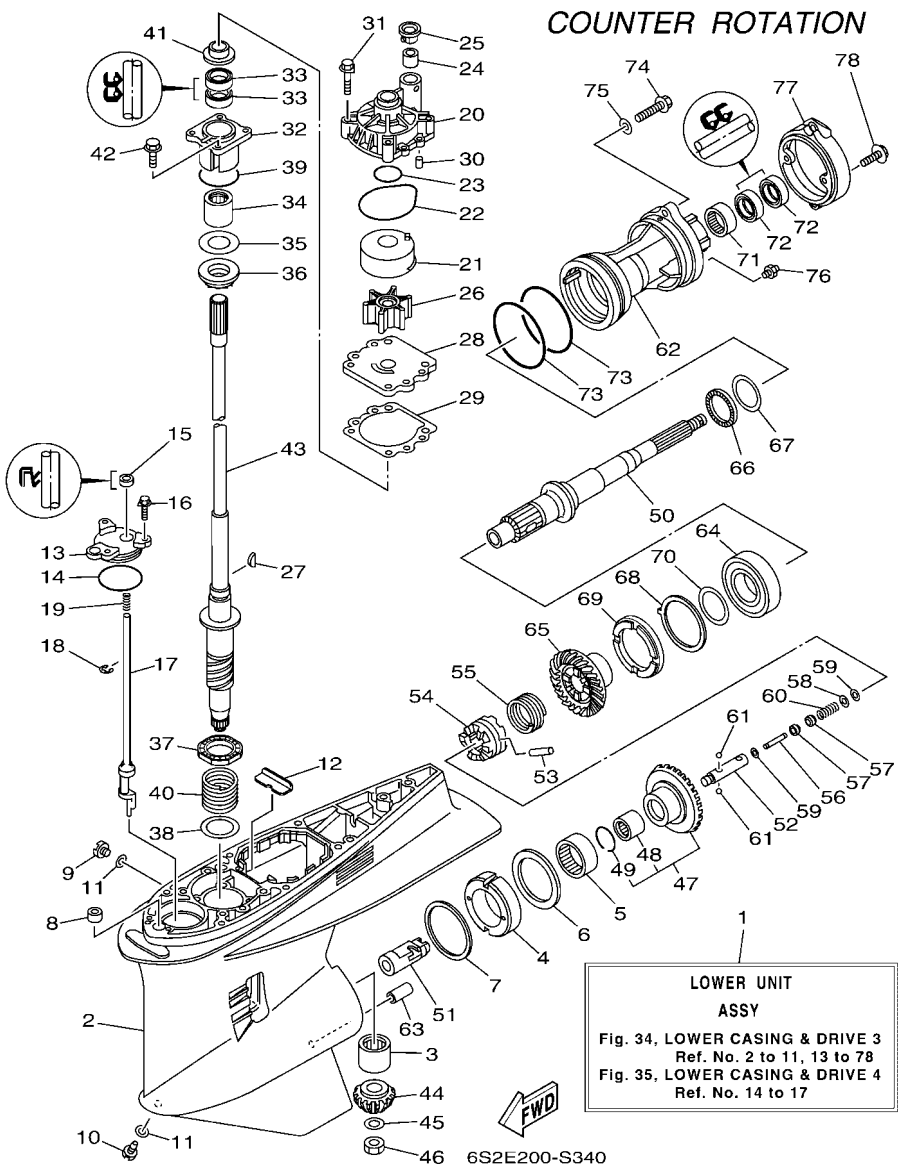

FIG. 34 LOWER CASING & DRIVE 3 — IMPULSOR E INFERIOR 3

REF. NO.	PART NO. CODIGO Nº	DESCRIPTION DESCRIPCION	6S1M	CAR	6S2M			REMARKS OBSERVACIONES
1	6FK–45300–03–8D	LOWER UNIT ASSY CONJUNTO UNIDAD INFERIOR			1			X(25.3"),LH X(25.3"),LH
	6FK–45300–13–8D	LOWER UNIT ASSY CONJUNTO UNIDAD INFERIOR			1			U(30.3"),LH U(30.3"),LH
2	6DX–45301–00–8D	CASING, LOWER FUNDA INFERIOR COMPLETA			1			
3	93311–83280	BEARING COJINETE DE RODILLOS			1			
4	61B–45538–01	SPACER 1 ESPACIADOR 1			1			
5	93315–660W3	BEARING COJINETE DE RODILLOS			1			
6	93341–670V0	BEARING COJINETES CON RODAMIENTOS			1			
7	61A–45567–00	SHIM (T:0.10MM) LAINA (T:0.10MM)			1			UR UR
	61A–45567–10	SHIM (T:0.12MM) LAINA (T:0.12MM)			1			UR UR
	61A–45567–20	SHIM (T:0.15MM) LAINA (T:0.15MM)			1			UR UR
	61A–45567–30	SHIM (T:0.18MM) LAINA (T:0.18MM)			1			UR UR
	61A–45567–40	SHIM (T:0.30MM) LAINA (T:0.30MM)			1			UR UR
	61A–45567–50	SHIM (T:0.40MM) LAINA (T:0.40MM)			1			UR UR
	61A–45567–60	SHIM (T:0.50MM) LAINA (T:0.50MM)			1			UR UR
8	663–44366–01	DAMPER, WATER SEAL 2 GOMA DEL SELLO DE AGUA 2			1			
9	90340–08002	PLUG, STRAIGHT SCREW TORNILLO, DE DRENAJE			1			
10	688–45341–10	PLUG, DRAIN TAPON, DREN			1			
11	90430–08003	GASKET JUNTA			2			
12	61A–45376–00	GUIDE, SEAL DAMPER GUIA DE SELLO GOMA			1			
13	61A–45321–01	PLATE PLACA			1			
14	93210–64488	O-RING ANILLO O			1			
15	93106–09014	OIL SEAL SELLO ACEITE			1			
16	90119–06286	BOLT, WITH WASHER TORNILLO CON ARANDELA			3			
17	69K–44150–00	SHIFT CAM ASSY CONJUNTO EJE LEVA COMPL.			1			
18	99001–08600	CIRCLIP PRESILLA REDONDA			1			
19	90501–11M10	SPRING, COMPRESSION RESORTE DE COMPRESION			1			
20	61A–44311–01	HOUSING, WATER PUMP CAJA BOMBA DE AGUA			1			

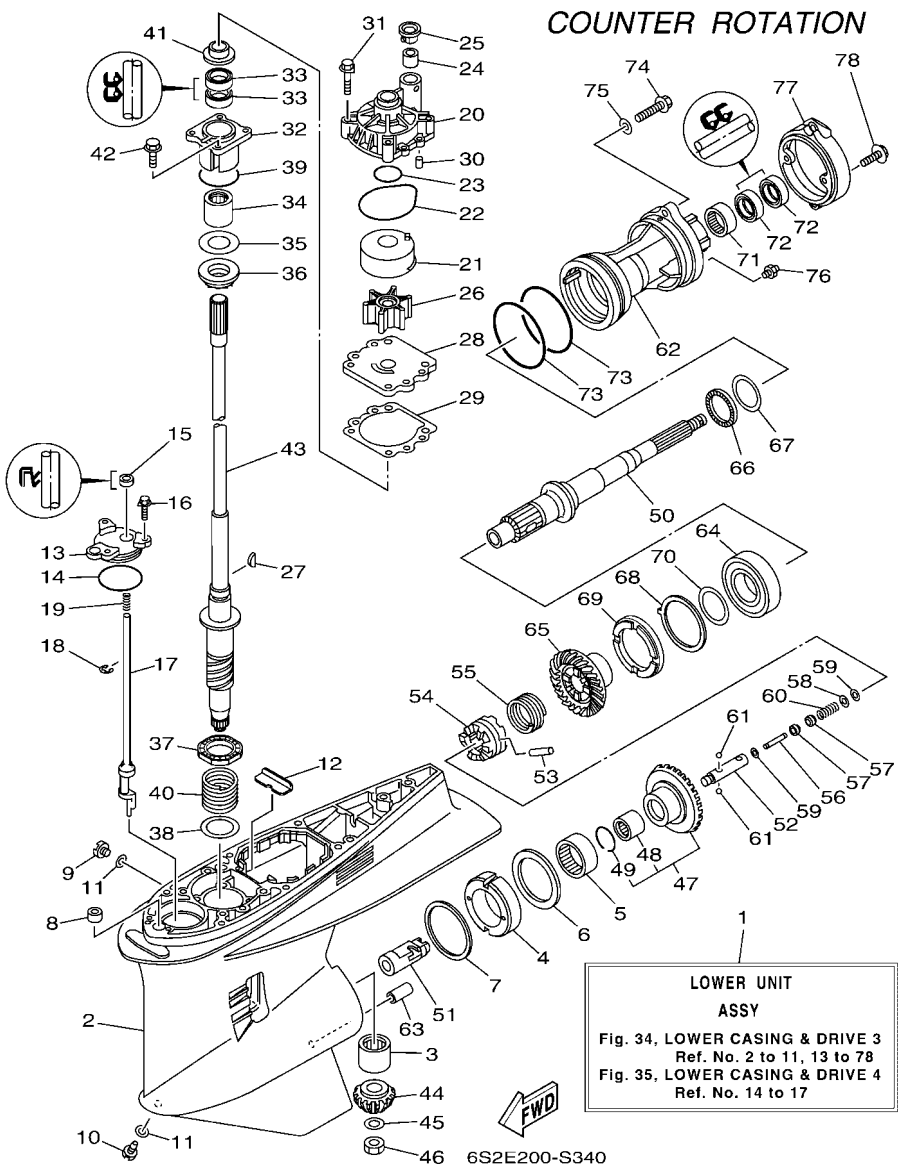

FIG. 34 LOWER CASING & DRIVE 3 — IMPULSOR E INFERIOR 3

REF. NO.	PART NO. CODIGO Nº	DESCRIPTION DESCRIPCION	6S1M	CAR	6S2M			REMARKS OBSERVACIONES
21	6R3–44322–42	INSERT, CARTRIDGE CARTUCHO			1			FOR CHROMATE FOR CHROMATE
22	93210–86M38	O-RING ANILLO O			1			
23	93210–37160	O-RING ANILLO O			1			
24	6E5–44365–01	DAMPER, WATER SEAL 1 HULE DE SELLO DE AGUA 1			1			
25	6E5–44312–00	COVER, WATER PUMP HOUSING CUBIERTA CAJA BOMBA DE AGUA			1			
26	6E5–44352–01	IMPELLER IMPULSOR			1			
27	90280–04M05	KEY, WOODRUFF CUNA WOODRUFF			1			
28	6G5–44323–41	OUTER PLATE, CARTRIDGE PLACA EXTERIOR DEL CARTUCHO			1			FOR CHROMATE FOR CHROMATE
29	6E5–44315–A0	GASKET, WATER PUMP EMPAQUE			1			
30	93606–12019	PIN, DOWEL PASADOR DE CLAVIJA			2			
31	90119–08191	BOLT, WITH WASHER TORNILLO CON ARANDELA			4			
32	61A–45331–00–9S	HOUSING, BEARING CAJA DE COJINETE			1			
33	93101–28019	OIL SEAL SELLO ACEITE			2			
34	93317–330U2	BEARING COJINETE			1			
35	61A–45587–00	SHIM (T:0.10MM) LAINA (T:0.10MM)			1			UR UR
	61A–45587–10	SHIM (T:0.12MM) LAINA (T:0.12MM)			1			UR UR
	61A–45587–20	SHIM (T:0.15MM) LAINA (T:0.15MM)			1			UR UR
	61A–45587–30	SHIM (T:0.18MM) LAINA (T:0.18MM)			1			UR UR
	61A–45587–40	SHIM (T:0.30MM) LAINA (T:0.30MM)			1			UR UR
	61A–45587–50	SHIM (T:0.40MM) LAINA (T:0.40MM)			1			UR UR
	61A–45587–60	SHIM (T:0.50MM) LAINA (T:0.50MM)			1			UR UR
36	93341–93020	BEARING COJINETES CON RODAMIENTOS			1			
37	93341–34019	BEARING COJINETES CON RODAMIENTOS			1			
38	90201–42014	WASHER, PLATE ARANDELA PLANA			1			
39	93210–55M14	O-RING ANILLO O			1			
40	90501–450A2	SPRING, COMPRESSION RESORTE DE COMPRESION			1			
41	6E5–45344–00	COVER, OIL SEAL CUBIERTA SELLO ACEITE			1			

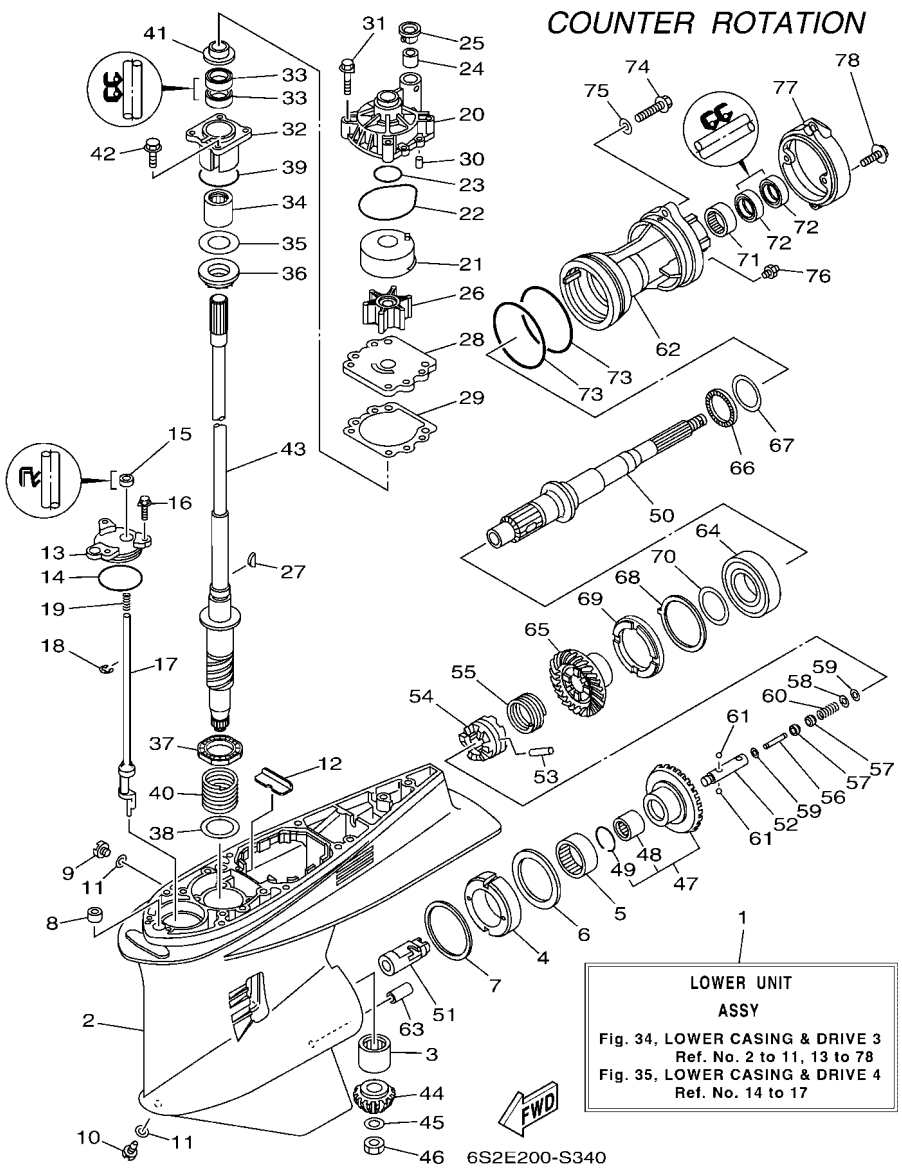

FIG. 34 LOWER CASING & DRIVE 3 — IMPULSOR E INFERIOR 3

REF. NO.	PART NO. CODIGO Nº	DESCRIPTION DESCRIPCION	6S1M	CAR	6S2M			REMARKS OBSERVACIONES
42	97E95–08525	BOLT, HEXAGON W/W DEEP RECESS TORNILLO HEXAGONAL CON RONDONA			4			
43	6P2–45501–01	DRIVE SHAFT COMP. EJE DE MANDO COMPL.			1			X(25.3") X(25.3")
	6P2–45501–11	DRIVE SHAFT COMP. EJE DE MANDO COMPL.			1			U(30.3") U(30.3")
44	6FJ–45551–00	PINION (13T) PINON (13T)			1			
45	90201–16M00	WASHER, PLATE ARANDELA PLANA			1			
46	90170–16M19	NUT TUERCA			1			
47	6FK–45560–00	GEAR 1 (26T) ENGRANAJE 1 (26T)			1			
48	93317–62891	.BEARING .COJINETE			1			
49	93450–37097	.CIRCLIP .SEGURO			1			
50	69K–45611–01	SHAFT, PROPELLER EJE PROPUSOR			1			
51	61B–45641–01	SHIFTER CAMBIO			1			
52	61A–45634–01	SLIDE, SHIFT DESLIZADOR, CAMBIO			1			
53	61A–45632–00	PIN, CROSS PASADOR TRANSVERSAL			1			
54	69J–45631–00	CLUTCH, DOG EMBRAGUE DE GARRA			1			
55	61A–45633–00	RING, CROSS PIN ANILLO DE PASADOR			1			
56	6H1–45668–00	SHAFT, FREE 1 EJE 1			1			
57	61A–45635–00	PLUNGER, SHIFT EMBOLO DE CAMBIO			2			
58	90201–02M00	WASHER, PLATE ARANDELA PLANA			1			
59	90183–02M03	NUT, SPRING TUERCA DE RESORTE			2			
60	90501–10M77	SPRING, COMPRESSION RESORTE DE COMPRESION			1			
61	93501–04011	BALL BOLA			2			
62	6DY–45332–00	HOUSING, BEARING CAJA BALERO 2			1			
63	99590–10114	PIN, DOWEL PASADOR, DE ESPIGA			1			
64	93332–00048	BEARING COJINETE			1			
65	6FK–45571–00	GEAR 2 (26T) ENGRANAJE 2 (26T)			1			
66	93341–440U5	BEARING COJINETES CON RODAMIENTOS			1			
67	6K1–45578–01	SHIM (T:0.10MM) LAINA (T:0.10MM)			1			UR UR

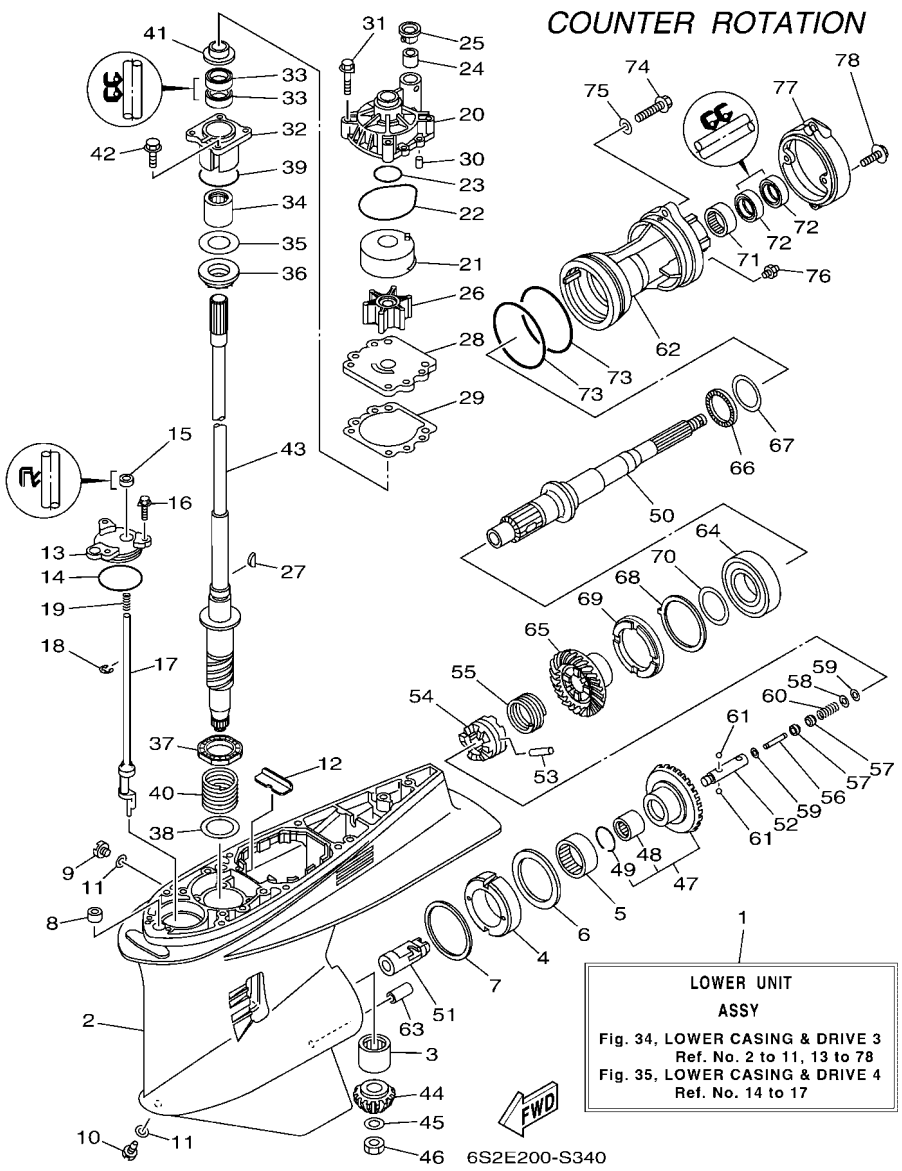

FIG. 34 LOWER CASING & DRIVE 3 — IMPULSOR E INFERIOR 3

REF. NO.	PART NO. CODIGO Nº	DESCRIPTION DESCRIPCION	6S1M	CAR	6S2M			REMARKS OBSERVACIONES
67	6K1–45578–10	SHIM (T:0.12MM) LAINA (:0.12MM)			1			UR UR
	6K1–45578–20	SHIM (T:0.15MM) LAINA (T:0.15MM)			1			UR UR
	6K1–45578–30	SHIM (T:0.18MM) LAINA (T:0.18MM)			1			UR UR
	6K1–45578–40	SHIM (T:0.30MM) LAINA (T:0.30MM)			1			UR UR
	6K1–45578–50	SHIM (T:0.40MM) LAINA (T:0.40MM)			1			UR UR
	6K1–45578–60	SHIM (T:0.50MM) LAINA (T:0.50MM)			1			UR UR
68	61B–45383–00	WASHER, CLAW ARANDELA DE UNA			1			
69	6DY–45384–00	NUT TUERCA			1			
70	69K–45577–00	SHIM (T:0.10MM) LAINA (:0.10MM)			1			UR UR
	69K–45577–10	SHIM (T:0.12MM) LAINA (:0.12MM)			1			UR UR
	69K–45577–20	SHIM (T:0.15MM) LAINA (T:0.15MM)			1			UR UR
	69K–45577–30	SHIM (T:0.18MM) LAINA (T:0.18MM)			1			UR UR
	69K–45577–40	SHIM (T:0.30MM) LAINA (T:0.30MM)			1			UR UR
	69K–45577–50	SHIM (T:0.40MM) LAINA (T:0.40MM)			1			UR UR
	69K–45577–60	SHIM (T:0.50MM) LAINA (T:0.50MM)			1			UR UR
71	93315–43064	BEARING COJINETE DE RODILLOS			1			
72	93101–30030	OIL SEAL SELLO ACEITE			2			
73	93211–04384	O-RING ANILLO O			2			
74	90105–08049	BOLT, FLANGE TORNILLO			2			
75	90201–08023	WASHER, PLATE ARANDELA PLANA			2			
76	93700–09M00	NIPPLE, GREASE BOQUILLA DE ENGRASAR			1			
77	6D0–45361–00–8D	CAP, LOWER CASING FUNDA INFERIOR			1			
78	97E95–08520	BOLT, HEXAGON W/W DEEP RECESS TORNILLO HEXAGONAL CON RONDONA			2			

FIG. 35 LOWER CASING & DRIVE 4 — IMPULSOR E INFERIOR 4

COUNTER ROTATION

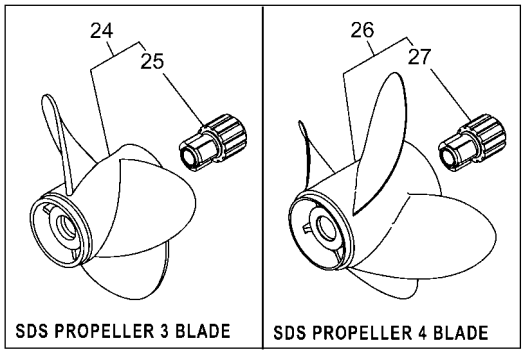

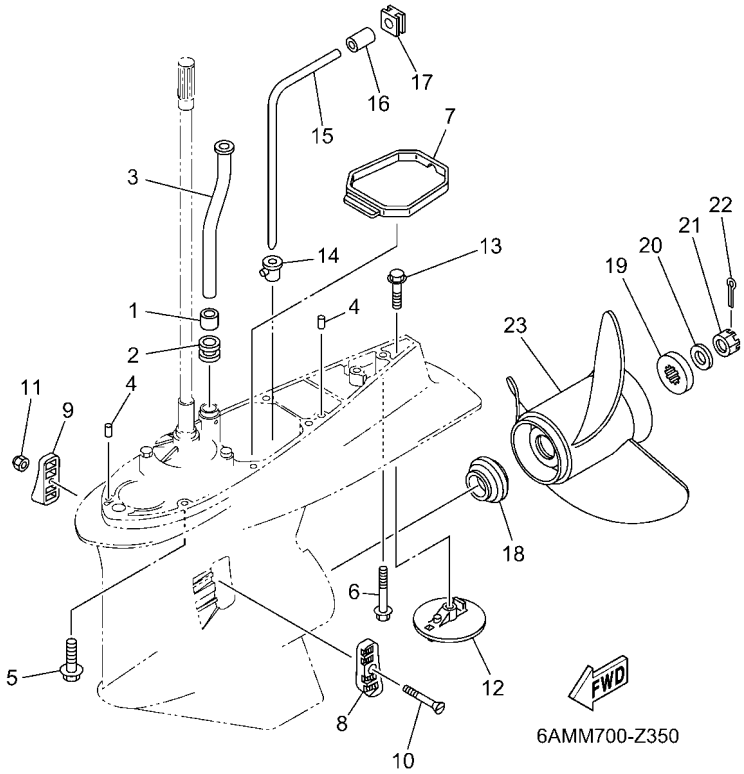

REF. NO.	PART NO. CODIGO Nº	DESCRIPTION DESCRIPCION	6S1M	CAR	6S2M			REMARKS OBSERVACIONES
1	6E5–44365–01	DAMPER, WATER SEAL 1 HULE DE SELLO DE AGUA 1			1			
2	6E5–44366–01	DAMPER, WATER SEAL 2 GOMA DEL SELLO DE AGUA 2			1			
3	6S1–44361–02	TUBE, WATER 1 TUBO DE AGUA 1			1			X(25.3") X(25.3")
	6S1–44361–12	TUBE, WATER 1 TUBO DE AGUA 1			1			U(30.3") U(30.3")
4	93608–12M05	PIN, DOWEL PASADOR DE CLAVIJA			2			
5	97E95–10645	BOLT, HEXAGON W/W DEEP RECESS TORNILLO HEXAGONAL CON RONDONA			7			X(25.3") X(25.3")
6	90119–10072	BOLT, WITH WASHER TORNILLO CON ARANDELA			1			X(25.3") X(25.3")
	90119–10008	BOLT, WITH WASHER TORNILLO CON ARANDELA			1			U(30.3") U(30.3")
7	6D0–45375–01	DAMPER, SEAL GOMA DE SELLO			1			
8	61A–45214–11	COVER, WATER INLET 1 CUBIERTA, ENTRADA AGUA 1			1			
9	61A–45215–11	COVER, WATER INLET 2 CUBIERTA, ENTRADA AGUA 2			1			
10	90152–05003	SCREW, COUNTERSUNK TORNILLO EMBUTIDO			1			
11	90185–05002	NUT, NYLON TUERCA AUTOBLOCANTE			1			
12	6CE–45373–00	ANODE ANODO			1			
13	90105–10M00	BOLT, FLANGE TORNILLO			1			
14	6D0–44367–00	DAMPER, WATER SEAL 3 GOMA DEL SELLO DE AGUA 3			1			
15	6D0–44362–01	TUBE, WATER 2 TUBO DE AGUA 2			1			
16	6D0–44365–00	DAMPER, WATER SEAL 1 HULE DE SELLO DE AGUA 1			1			
17	6D0–44366–01	DAMPER, WATER SEAL 2 GOMA DEL SELLO DE AGUA 2			1			
18	69J–45987–00	SPACER 1 ESPACIADOR 1			1			
19	688–45997–01	SPACER 2 ESPACIADOR 2			1			
20	92990–18200	WASHER ARANDELA PLANA			1			
21	90171–18M04	NUT, CASTLE TUERCA ENTALLADA			1			
22	91490–40030	PIN. COTTER CHAVETA			1			
23	6K1–45947–00	PROPELLER (3X14-1/2"X17"-ML) PROPELA (3X14-1/2"X17"-ML)			1			UR UR
	6K1–45945–00	PROPELLER (3X14"X19"-ML) PROPELA (3X14"X19"-ML)			1			UR UR
	6K1–45970–01	PROPELLER (3X15-1/4"X15"-ML) PROPELA (3X15-1/4"X15"-ML)			1			UR UR

FIG. 35 LOWER CASING & DRIVE 4 — IMPULSOR E INFERIOR 4

COUNTER ROTATION

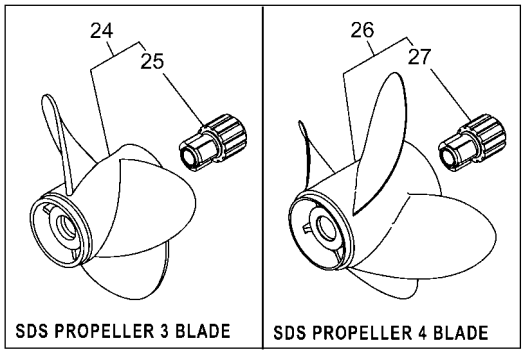

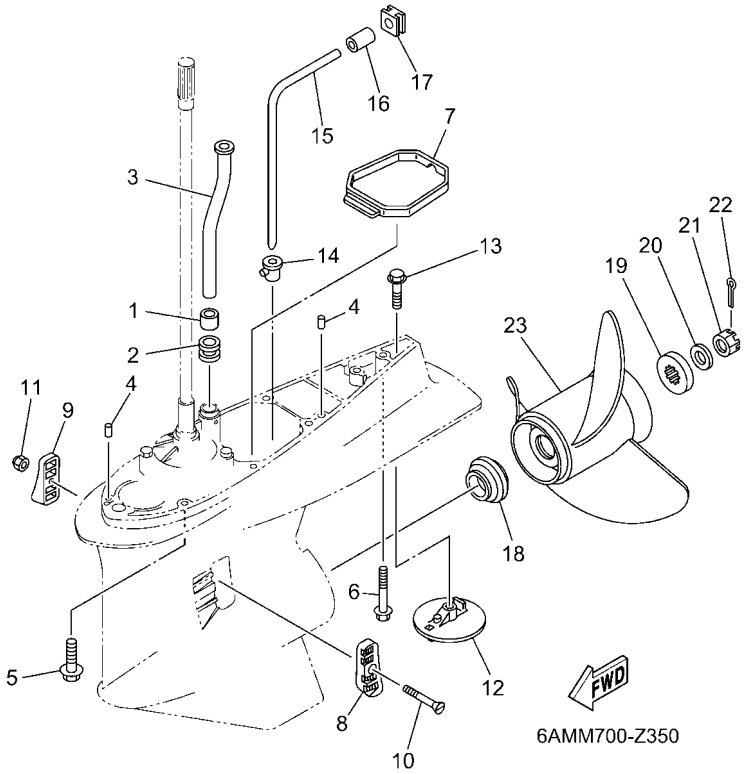

REF. NO.	PART NO. CODIGO Nº	DESCRIPTION DESCRIPCION	6S1M	CAR	6S2M			REMARKS OBSERVACIONES
23	6K1–45978–02	PROPELLER (3X13-3/4"X17"-ML1) PROPELA (3X13-3/4"X17"-ML1)			1			UR UR
	6K1–45974–02	PROPELLER (3X13-3/4"X19"-ML1) PROPELA (3X13-3/4"X19"-ML1)			1			UR UR
	6K1–45972–01	PROPELLER (3X13-3/4"X21"-ML) PROPELA (3X13-3/4"X21"-ML)			1			UR UR
	6K1–45976–00	PROPELLER (3X13-3/8"X23"-ML) PROPELA (3X13-3/8"X23"-ML)			1			UR UR
	61B–45978–00	PROPELLER (3X15"X17"-TL) PROPELA (3X15"X17"-TL)			1			UR UR
	61B–45974–00	PROPELLER (3X14-1/2"X19"-TL) PROPELA (3X14-1/2"X19"-TL)			1			UR UR
	61B–45972–00	PROPELLER (3X14-1/2"X21"-TL) PROPELA (3X14-1/2"X21"-TL)			1			UR UR
	6R1–45976–A0	PROPELLER (3X15-1/4"X15"-ML) PROPELA (3X15-1/4"X15"-ML)			1			UR UR
	6R1–45978–A0	PROPELLER (3X15-1/4"X17"-ML) PROPELA (3X15-1/4"X17"-ML)			1			UR UR
	6R1–45972–A0	PROPELLER (3X14-7/8"X21"-ML) PROPELA (3X14-7/8"X21"-ML)			1			UR UR
	6R1–45974–A0	PROPELLER (3X14-1/2"X23"-ML) PROPELA (3X14-1/2"X23"-ML)			1			UR UR
24	60J–45970–00	PROPELLER (3X14-1/4"X14"-ML) PROPELA (3X14-1/4"X14"-ML)			1			UR SDS 3 BLADE UR SDS 3 BLADE
	60J–45972–00	PROPELLER (3X14-1/4"X16"-ML) PROPELA (3X14-1/4"X16"-ML)			1			UR SDS 3 BLADE UR SDS 3 BLADE
	60J–45974–00	PROPELLER (3X14-1/4"X18"-ML) PROPELA (3X14-1/4"X18"-ML)			1			UR SDS 3 BLADE UR SDS 3 BLADE
	60J–45976–00	PROPELLER (3X14-1/4"X20"-ML) PROPELA (3X14-1/4"X20"-ML)			1			UR SDS 3 BLADE UR SDS 3 BLADE
	60J–45978–00	PROPELLER (3X14-1/4"X22"-ML) PROPELA (3X14-1/4"X22"-ML)			1			UR SDS 3 BLADE UR SDS 3 BLADE
	68G–45930–20	PROPELLER (3X14-1/2"X14"-ML) PROPELA (3X14-1/2"X14"-ML)			1			UR SDS 3 BLADE UR SDS 3 BLADE
	68G–45970–20	PROPELLER (3X14-1/2"X15"-ML) PROPELA (3X14-1/2"X15"-ML)			1			UR SDS 3 BLADE UR SDS 3 BLADE
	68G–45972–20	PROPELLER (3X14-1/4"X17"-ML) PROPELA (3X14-1/4"X17"-ML)			1			UR SDS 3 BLADE UR SDS 3 BLADE
	68G–45978–20	PROPELLER (3X14-1/4"X18"-ML) PROPELA (3X14-1/4"X18"-ML)			1			UR SDS 3 BLADE UR SDS 3 BLADE
	68G–45974–20	PROPELLER (3X13-3/4"X19"-ML) PROPELA (3X13-3/4"X19"-ML)			1			UR SDS 3 BLADE UR SDS 3 BLADE
	68G–45976–20	PROPELLER (3X13-3/4"X21"-ML) PROPELA (3X13-3/4"X21"-ML)			1			UR SDS 3 BLADE UR SDS 3 BLADE
	6CF–45930–20	PROPELLER (3X15-3/4"X13"-TL) PROPELA (3X15-3/4"X13"-TL)			1			UR SDS 3 BLADE UR SDS 3 BLADE
	6CF–45D70–20	PROPELLER (3X15-3/4"X14"-TL) PROPELA (3X15-3/4"X14"-TL)			1			UR SDS 3 BLADE UR SDS 3 BLADE
	6CF–45976–20	PROPELLER (3X15-3/4"X15"-TL) PROPELA (3X15-3/4"X15"-TL)			1			UR SDS 3 BLADE UR SDS 3 BLADE
	6CF–45938–20	PROPELLER (3X15-1/2"X16"-TL) PROPELA (3X15-1/2"X16"-TL)			1			UR SDS 3 BLADE UR SDS 3 BLADE
	6CF–45978–20	PROPELLER (3X15-1/2"X17"-TL) PROPELA (3X15-1/2"X17"-TL)			1			UR SDS 3 BLADE UR SDS 3 BLADE

FIG. 35 LOWER CASING & DRIVE 4 — IMPULSOR E INFERIOR 4

COUNTER ROTATION

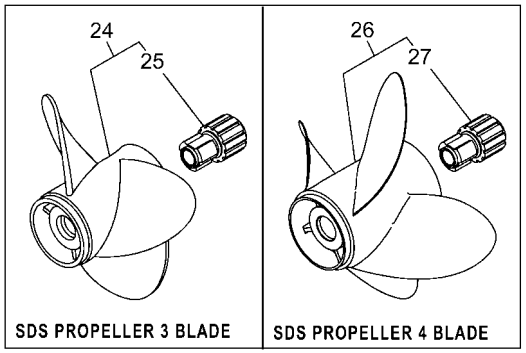

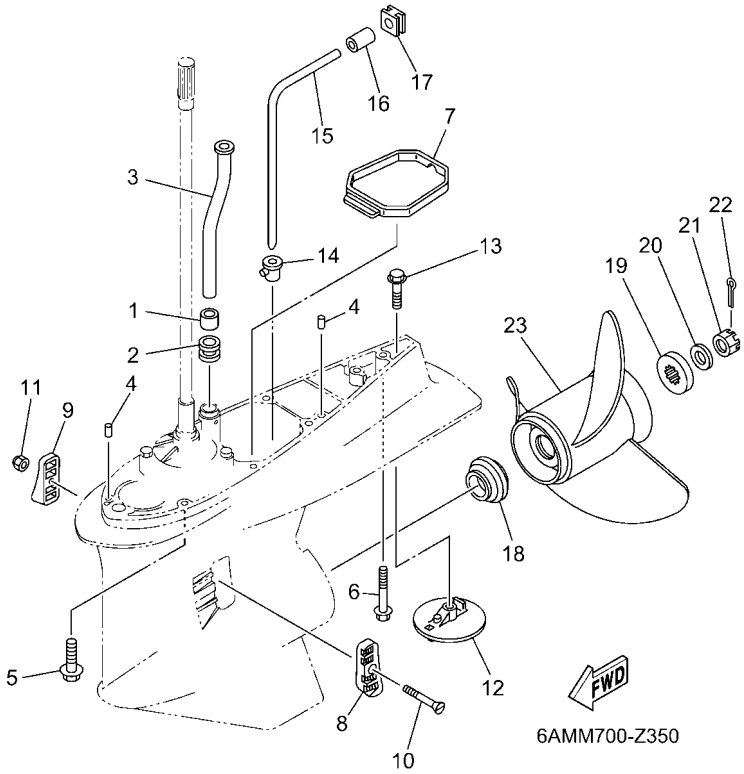

REF. NO.	PART NO. CODIGO Nº	DESCRIPTION DESCRIPCION	6S1M	CAR	6S2M			REMARKS OBSERVACIONES
24	6CF–45934–20	PROPELLER (3X15-1/4"X18"-TL) PROPELA (3X15-1/4"X18"-TL)			1			UR SDS 3 BLADE UR SDS 3 BLADE
	6CF–45970–20	PROPELLER (3X15-1/4"X19"-TL) PROPELA (3X15-1/4"X19"-TL)			1			UR SDS 3 BLADE UR SDS 3 BLADE
	6CF–45932–20	PROPELLER (3X15"X20"-TL) PROPELA (3X15"X20"-TL)			1			UR SDS 3 BLADE UR SDS 3 BLADE
	6CF–45972–20	PROPELLER (3X15"X21"-TL) PROPELA (3X15"X21"-TL)			1			UR SDS 3 BLADE UR SDS 3 BLADE
	6CF–45936–20	PROPELLER (3X14-3/4"X22"-TL) PROPELA (3X14-3/4"X22"-TL)			1			UR SDS 3 BLADE UR SDS 3 BLADE
	6CF–45974–20	PROPELLER (3X14-3/4"X23"-TL) PROPELA (3X14-3/4"X23"-TL)			1			UR SDS 3 BLADE UR SDS 3 BLADE
	6CF–45D72–20	PROPELLER (3X14-3/4X24-TL) PROPELA (3X14-3/4X24-TL)			1			UR SDS 3 BLADE UR SDS 3 BLADE
	6CF–45D74–20	PROPELLER (3X14-3/4X25-TL) PROPELA (3X14-3/4X25-TL)			1			UR SDS 3 BLADE UR SDS 3 BLADE
25	6CE–45C81–10	.DAMPER RUBBER, PROPELLER 1 .AMORTIGUADOR PROPELA 1			1			
26	6CF–45B70–20	PROPELLER (4X15"X21"-TL) PROPELA (4X15"X21"-TL)			1			UR SDS 4 BLADE UR SDS 4 BLADE
	6CF–45B72–20	PROPELLER (4X15"X22"-TL) PROPELA (4X15"X22"-TL)			1			UR SDS 4 BLADE UR SDS 4 BLADE
	6CF–45B74–20	PROPELLER (4X15"X23"-TL) PROPELA (4X15"X23"-TL)			1			UR SDS 4 BLADE UR SDS 4 BLADE
27	6CE–45C81–10	.DAMPER RUBBER, PROPELLER 1 .AMORTIGUADOR PROPELA 1			1			

FIG. 36 STEERING GUIDE ATTACHMENT 1 — ADITAMENTO GUIA DE GOBIERNO 1

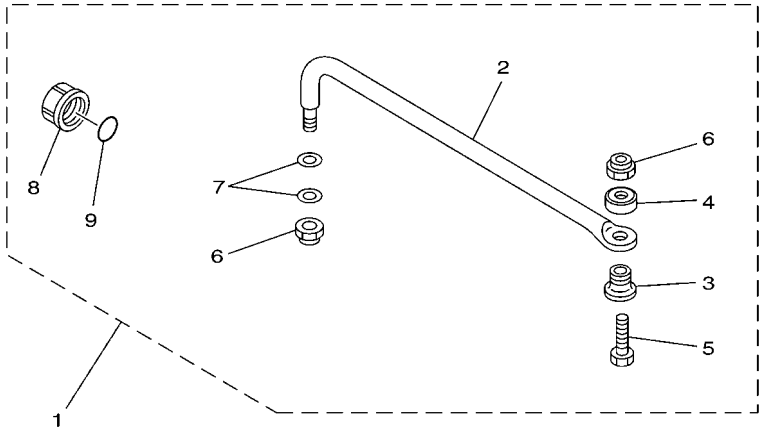

67H0100-9290

REF. NO.	PART NO. CODIGO Nº	DESCRIPTION DESCRIPCION	6S1M	CAR	6S2M			REMARKS OBSERVACIONES
1	6E5–61350–02	STEERING GUIDE ATTACHMENT KIT ESTUCHE ADITAMENTO GUIA DE TIM	1					AP EXCEPT CAR,MDV,NME AP EXCEPT CAR,MDV,NME
2	6E5–61351–01	.ROD, STEERING LINK .VARILLA ESLABON DIRECCION	1					
3	90387–10M61	.COLLAR .ESPACIADOR	1					
4	90560–12M01	.SPACER .SEPARADOR	1					
5	6E5–61355–00	.BOLT .TORNILLO	1					
6	90185–09M01	.NUT, SELF-LOCKING .TUERCA AUTOBLOCANTE	2					
7	90201–10M20	.WASHER, PLATE .ARANDELA PLANA	2					
8	6E5–43145–01	.CAP, CLAMP BRACKET .TAPA	1					
9	93210–16275	.O-RING .ANILLO O	1					

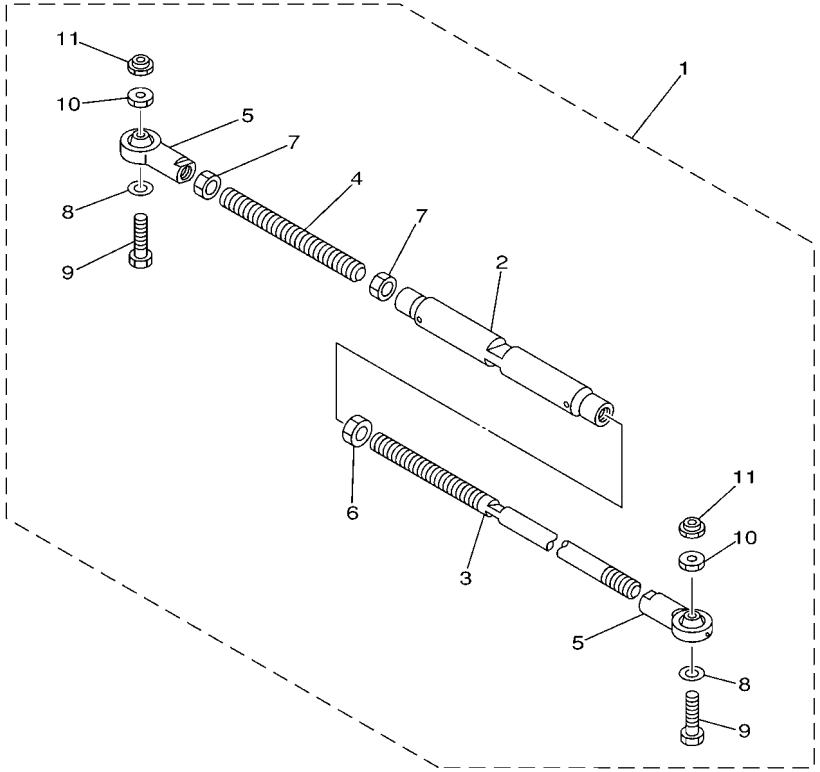

67H0100-0300

FIG. 37 STEERING GUIDE ATTACHMENT 2 — ADITAMENTO GUIA DE GOBIERNO 2

REF. NO.	PART NO. CODIGO Nº	DESCRIPTION DESCRIPCION	6S1M	CAR	6S2M			REMARKS OBSERVACIONES
1	6E5–61310–00	TIE BAR ASSY (L:600-800MM) CONJUNTO DE BARRA DE UNION			1			AP EXCEPT FOR NME AP EXCEPT FOR NME
2	6E5–61313–00	.ADJUSTER .AJUSTADOR			1			
3	6E5–61311–11	.TIE BAR .BARRA SEPARADORA			1			
4	6E5–61315–00	.TIE BAR .ROTOR DE BOMBA AGUA			1			
5	6E5–61303–01	.STEERING AXLE COMP. .OJO-DIRECCION COMPL.			2			
6	90170–14M06	.NUT .TUERCA			1			
7	95380–14700	.NUT .TUERCA			2			
8	90201–10M76	.WASHER, PLATE .ARANDELA PLANA			2			
9	90101–09M70	.BOLT .TORNILLO			2			
10	90170–09M05	.NUT .TUERCA			2			
11	90185–09M01	.NUT, SELF-LOCKING .TUERCA AUTOBLOCANTE			2			

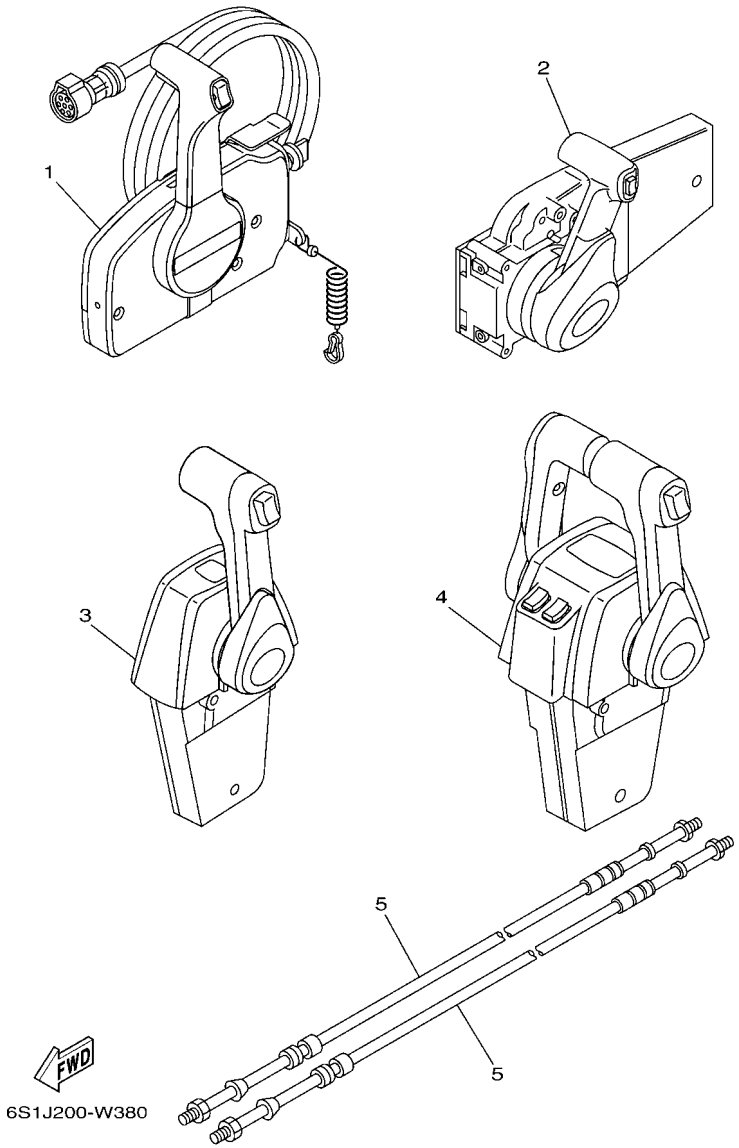

FIG. 38 REMOTE CONTROL BOX — CONTROL REMOTO COMPLETO

REF. NO.	PART NO. CODIGO Nº	DESCRIPTION DESCRIPCION	6S1M	CAR	6S2M			REMARKS OBSERVACIONES
1	703–48205–25	REMOTE CONTROL ASSY (10P, PTT) REMOTO CONTROL COMPL. (10P)	1					AP AFR WITH PT/T SW. AP AFR WITH PT/T SW.
	703–48207–25	REMOTE CONTROL ASSY (10P, PTT) REMOTO CONTROL COMPL. (10P)	1					AP CHN,OTH WITH PT/T SW. AP CHN,OTH WITH PT/T SW.
2	6X3–48206–11	REMOTE CONTROL ASSY REMOTO CONTROL COMPL.	1					AP BRA AP BRA
3	704–48205–R2	REMOTE CONTROL ASSY (R/H) REMOTO CONTROL COMPL. (R/H)		1				AP CAR WITH PT/T SW. AP CAR WITH PT/T SW.
4	704–48207–R2	REMOTE CONTROL ASSY REMOTO CONTROL COMPL.			1			AP EXCEPT NME WITH PT/T SW. AP EXCEPT NME WITH PT/T SW.
5	701–48320–70	CABLE, REMOTE CONTROL L=20F CABLE CONTROL REMOTO L=20F	2	2	2			UR UR
	701–48350–50	CABLE, REMOTE CONTROL L=26F CABLE CONTROL REMOTO L=26F	2	2	2			UR UR
	701–48350–80	CABLE, REMOTE CONTROL L=31F CABLE CONTROL REMOTO L=31F	2	2	2			UR UR

FIG. 39 REMOTE CONTROL ASSY 1 — CONTROL REMOTO COMPL 1

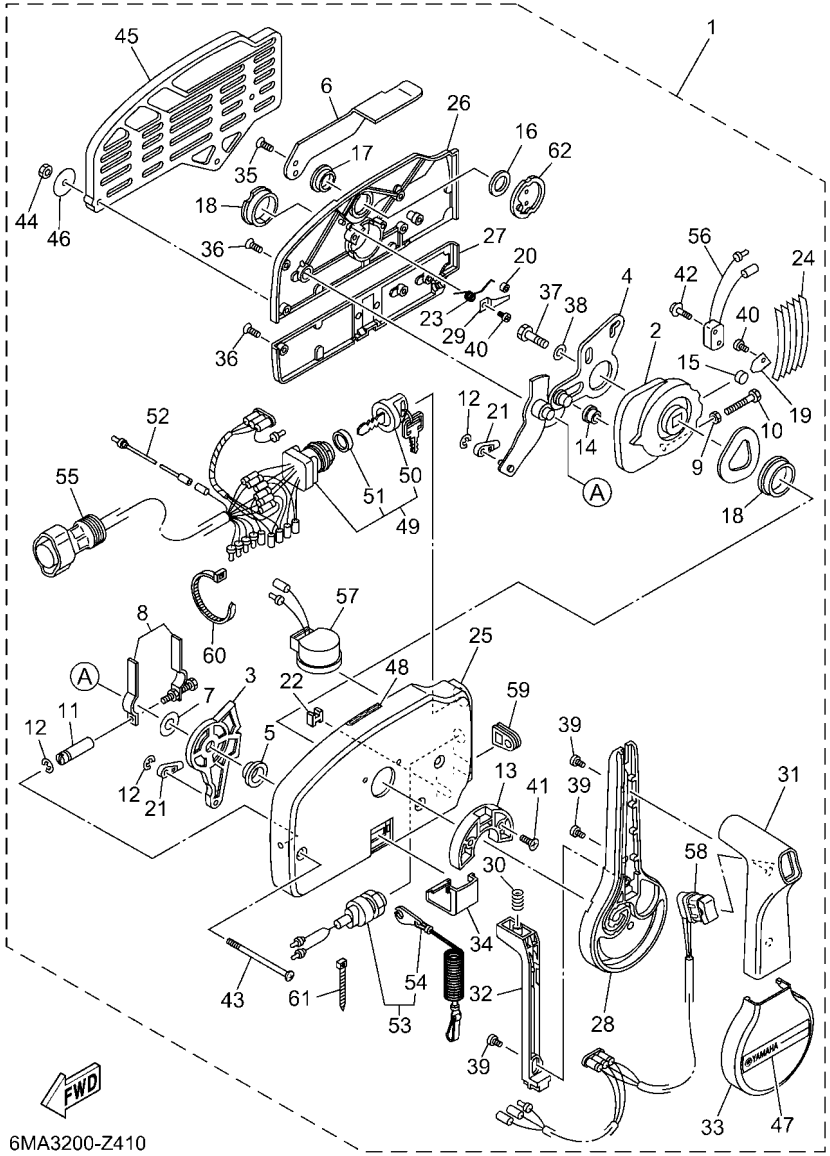

REF. NO.	PART NO. CODIGO Nº	DESCRIPTION DESCRIPCION	6S1M	CAR	6S2M			REMARKS OBSERVACIONES
1	703–48205–25	REMOTE CONTROL ASSY (10P, PTT) REMOTO CONTROL COMPL. (10P)	1					AP AFR WITH PT/T SW. AP AFR WITH PT/T SW.
	703–48207–25	REMOTE CONTROL ASSY (10P, PTT) REMOTO CONTROL COMPL. (10P)	1					AP CHN,OTH WITH PT/T SW. AP CHN,OTH WITH PT/T SW.
2	703–48232–00	.GEAR .ENGRANAJE 1	1					
3	703–48271–00	.ARM, SHIFT .BRAZO CAMBIADOR	1					
4	703–48261–01	.ARM, THROTTLE .BRAZO ACELERADOR	1					
5	703–48235–00	.BUSHING .BUJE	1					
6	703–48152–10	.KNOB, FREE ACCEL. .PERILLA	1					
7	703–48268–00	.SPACER .ESPACIADOR 3	1					
8	703–48264–00	.FRICTION, THROTTLE .FRICCION DE ACELERADOR	1					
9	95380–05600	.NUT .TUERCA	1					
10	97380–05025	.BOLT .TORNILLO HEXAGONAL	1					
11	703–48265–10	.SHAFT, FRICTION .EJE FRICCION	1					
12	93430–06024	.CIRCLIP .SEGURO	3					
13	703–48245–00	.PLATE, LOCK .PLACA CERRADURA	1					
14	703–48252–00	.ROLLER, CAM .RODILLO LEVA	1					
15	701–48248–00	.ROLLER, FREE ACCEL. .RODILLO ACELERADOR LIBRE	1					
16	703–48198–00	.WASHER, WAVE .RONDANA ONDULADA 3	1					
17	703–48243–00	.BUSHING .BUJE 3	1					
18	703–48236–00	.BUSHING 1 .BUJE	2					
19	703–48189–00	.RETAINER .RETENEDOR	1					
20	703–48234–00	.ROLLER, DETENT .RODILLO	1					
21	703–48345–01	.CABLE END, REMOTE CONTROL 2 .TERMINAL CABLE DE CONTROL REMO	2					
22	703–48358–01	.ANCHOR, CABLE .ABRAZADERA CABLE	1					
23	703–48244–00	.SPRING, FREE ACCEL. .RESORTE ACELERADOR LIBRE	1					
24	703–48238–00	.SPRING, DETENT .RESORTE	5					
25	703–48211–10	.HOUSING,1 .CAJA	1					
26	703–48212–10	.BACK PLATE 1 .PLACA TRASERA 1	1					

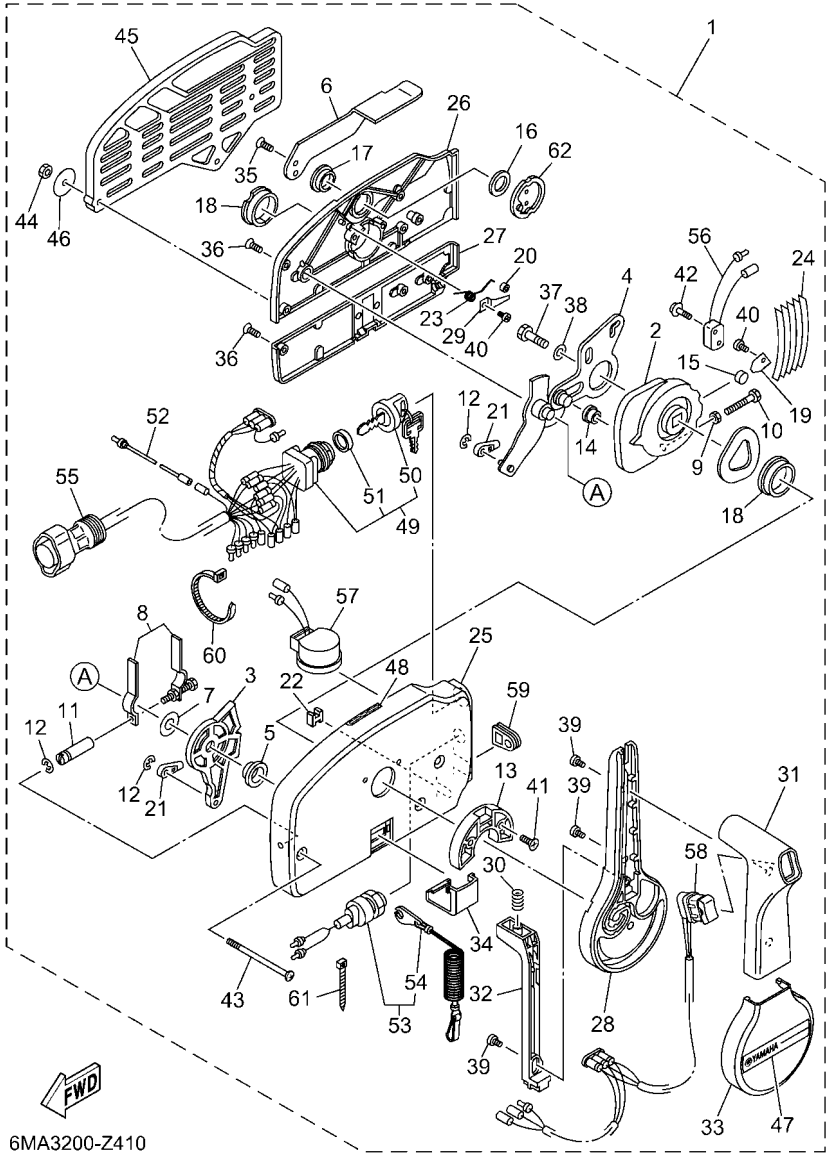

FIG. 39 REMOTE CONTROL ASSY 1 — CONTROL REMOTO COMPL 1

REF. NO.	PART NO. CODIGO Nº	DESCRIPTION DESCRIPCION	6S1M	CAR	6S2M			REMARKS OBSERVACIONES
27	703–48213–10	.BACK PLATE 2 .PLACA TRASERA 2	1					
28	703–48221–10	.LEVER, CONTROL .PALANCA CONTROL	1					
29	703–48246–00	.SPACER .ESPACIADOR	1					
30	703–48227–00	.SPRING, NEUTRAL LOCK .RESORTE DE SEGURO	1					
31	703–48222–20	.GRIP, CONTROL LEVER .MANGO DE PALANCA CONTROL	1					SINGLE SINGLE
32	703–48223–10	.LOCK, NEUTRAL .CERRADURA NEUTRO	1					
33	703–48225–10	.COVER .CUBIERTA	1					
34	703–48219–10	.COVER, LEAD .CUBIERTA	1					
35	703–48281–00	.SCREW .TORNILLO 1	2					
36	703–44189–20	.SCREW .TORNILLO	5					
37	97380–08030	.BOLT .TORNILLO HEXAGONAL	1					
38	92990–08600	.WASHER, PLATE .ARANDELA PLANA	1					
39	703–48128–10	.SCREW 2 .TORNILLO 2	3					
40	98580–04006	.SCREW, PAN HEAD .TORNILLO DE CABEZA CRUZADA	2					
41	703–44189–40	.SCREW .TORNILLO	2					
42	703–48129–00	.SCREW 3 .TORNILLO 3	2					
43	703–44189–30	.SCREW .TORNILLO	3					
44	95380–06600	.NUT, HEXAGON .TUERCA	3					
45	703–48293–11	.SPACER, REMOTE CONTROL .ESPACIADOR	1					SINGLE SINGLE
46	701–48287–00	.WASHER .ARANDELA	3					
47	703–48215–11	.GRAPHIC .CALCOMANIA 1	1					
48	6X3–44191–00	.INDICATOR, SHIFT .INDICADOR DE CAMBIOS	1					
49	703–82510–45	.MAIN SWITCH ASSY .CONJUNTO DE LLAVE IGNICION	1					
50	703–82577–00	..CAP, KEY ..TAPA	1					
51	6K1–82532–00	..CAP ..TAPA	1					
52	703–82531–00	.WIRE, LEAD (L70) .CABLE CONDUCTOR (L70)	1					
53	688–82575–02	.ENGINE STOP SWITCH ASSY .INTERRUPTOR DE PARADA COMPL	1					

FIG. 39 REMOTE CONTROL ASSY 1 — CONTROL REMOTO COMPL 1

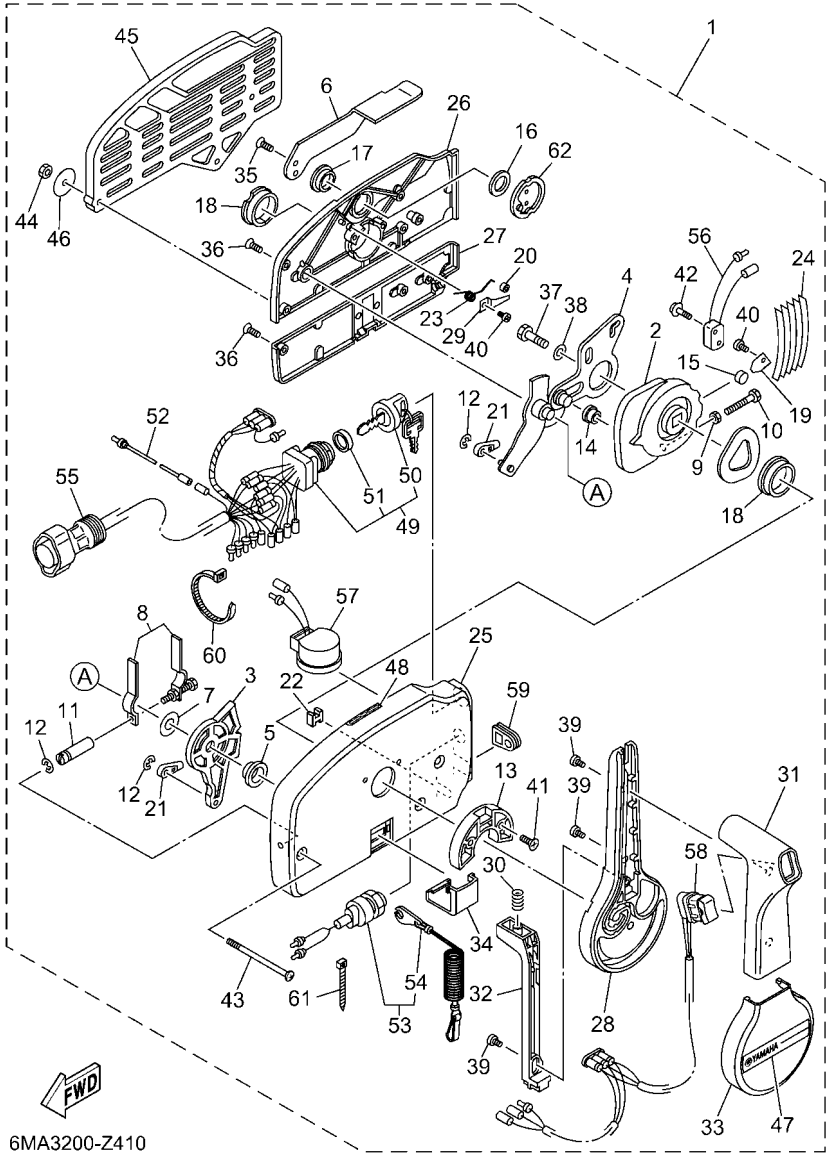

REF. NO.	PART NO. CODIGO Nº	DESCRIPTION DESCRIPCION	6S1M	CAR	6S2M			REMARKS OBSERVACIONES
54	682–82556–00	..LANYARD, STOP SWITCH ..CORDON DE INTERRUPTOR PARADA	1					
55	688–8258A–20	.EXTENSION, WIRE HARNESS (4.9M) .EXTENSION, ARNES DE CABLES (4.	1					(10P) (10P)
56	703–82540–00	.NEUTRAL SWITCH ASSY .INTERRUPTOR NEUTRAL COMPL	1					
57	703–83383–11	.BUZZER .ZUMBADOR	1					
58	703–82563–31	.TRIM & TILT SWITCH ASSY .INTERRUPTOR DE INCLINACION	1					FOR 703-48205-25 FOR 703-48205-25
	703–82563–21	.TRIM & TILT SWITCH ASSY .INTERRUPTOR DE INCLINACION	1					FOR 703-48207-25 FOR 703-48207-25
59	703–48284–00	.GROMMET .TAPON	1					FOR 703-48205-25 FOR 703-48205-25
	703–48284–10	.GROMMET .TAPON	1					FOR 703-48207-25 FOR 703-48207-25
60	703–82591–00	.BAND .BANDA	1					
61	703–82592–00	.BAND .BANDA	1					
62	703–48153–00	.SHAFT, FREE ACCEL. .EJE	1					

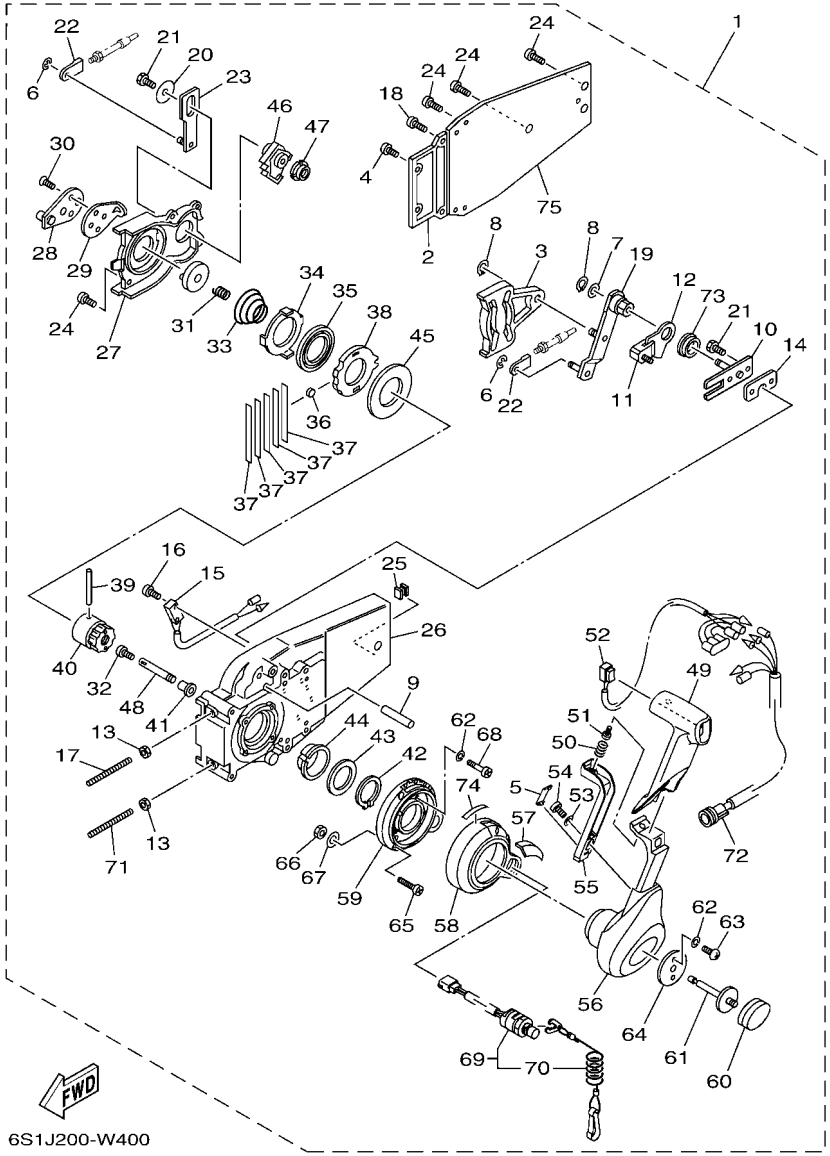

FIG. 40 REMOTE CONTROL ASSY 2 — CONTROL REMOTO COMPL 2

REF. NO.	PART NO. CODIGO Nº	DESCRIPTION DESCRIPCION	6S1M	CAR	6S2M			REMARKS OBSERVACIONES
1	6X3–48206–11	REMOTE CONTROL ASSY REMOTO CONTROL COMPL.	1					AP BRA AP BRA
2	EL8–48212–00	.BACK PLATE 1 .PLACA TRASERA 1	1					
3	EL8–48251–00	.PLATE, CAM .PLACA,LEVA	1					
4	97890–05016	.SCREW, PAN HEAD .TORNILLO	2					
5	6X0–48138–00	.CAP, LOCK ARM .TAPON	1					
6	93430–06024	.CIRCLIP .SEGURO	3					
7	92990–10600	.WASHER, PLATE .ARANDELA PLANA	1					
8	EL8–48259–00	.CIRCLIP 1 .SEGURO	2					
9	6X0–48265–00	.SHAFT, FRICTION .EJE FRICCION	1					
10	6X0–48262–00	.SHAFT, THROTTLE .EJE DE ACELERADOR	1					
11	6X0–48264–00	.THROTTLE, FRICTION .FRICCION DE ACELERADOR	1					
12	6X0–48187–00	.PLATE, ADJUST .TAPON	1					
13	95380–06600	.NUT, HEXAGON .TUERCA	2					
14	704–48266–00	.SPACER .ESPACIADOR 2	1					
15	704–82540–00	.NEUTRAL SWITCH ASSY .INTERRUPTOR NEUTRAL COMPL	1					
16	703–48129–00	.SCREW 3 .TORNILLO 3	2					
17	EL8–48281–00	.SCREW .TORNILLO 1	1					
18	97890–05025	.SCREW, PAN HEAD .TORNILLO	2					
19	6X0–48261–00	.ARM, THROTTLE .BRAZO ACELERADOR	1					
20	EL8–48191–00	.WASHER 1 .ARANDELA	1					
21	97380–06018	.BOLT .TORNILLO HEXAGONAL	3					
22	703–48345–01	.CABLE END, REMOTE CONTROL 2 .TERMINAL CABLE DE CONTROL REMO	2					
23	EL8–48271–00	.ARM, SHIFT .BRAZO CAMBIADOR	1					
24	EL8–48127–00	.SCREW 1 .TORNILLO 1	11					
25	703–48358–01	.ANCHOR, CABLE .ABRAZADERA CABLE	1					
26	6X0–48211–00	.HOUSING,1 .CAJA	1					
27	EL8–48231–00	.HOUSING, GEAR .CAJA,ENGRANAJE	1					

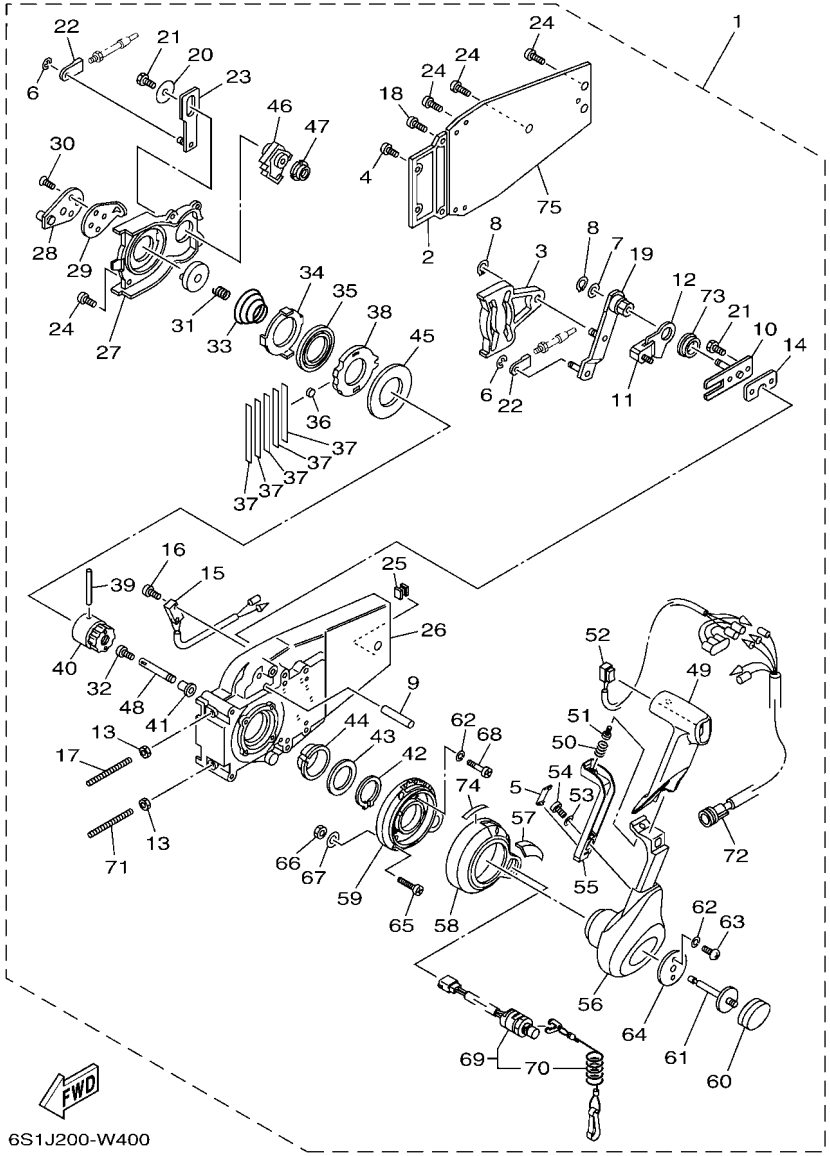

FIG. 40 REMOTE CONTROL ASSY 2 — CONTROL REMOTO COMPL 2

REF. NO.	PART NO. CODIGO Nº	DESCRIPTION DESCRIPCION	6S1M	CAR	6S2M			REMARKS OBSERVACIONES
28	EL8–48241–00	.ARM, DRIVE .BRAZO,MANDO	1					
29	EL8–48254–00	.STOPPER, THROTTLE ADJUSTING .TAPON	1					
30	92780–06020	.SCREW, FLAT HEAD .TORNILLO CABEZA PLANA	2					
31	EL8–48158–00	.SPRING 1 .RESORTE 1	1					
32	98580–04006	.SCREW, PAN HEAD .TORNILLO DE CABEZA CRUZADA	1					
33	EL8–48244–00	.SPRING, FREE ACCEL. .RESORTE ACELERADOR LIBRE	1					
34	EL8–48245–00	.PLATE, LOCK .PLACA CERRADURA	1					
35	704–48178–00	.PLATE, SHIFT .PLACA	1					
36	701–48248–00	.ROLLER, FREE ACCEL. .RODILLO ACELERADOR LIBRE	1					
37	704–48238–00	.SPRING, DETENT .RESORTE	5					
38	6X0–48121–00	.GEAR 1 .ENGRANAJE 1	1					
39	EL8–48164–00	.PIN 2 .PASADOR 2	1					
40	EL8–48242–10	.SHAFT, DRIVE .EJE, PROPULSION	1					
41	702–48263–00	.BUSHING .BUJE 4	1					
42	EL8–48279–00	.CIRCLIP 2 .SEGURO2	1					
43	704–48193–00	.WASHER 3 .RONDANA 3	1					
44	EL8–48234–00	.BUSHING 1 .BUJE	1					
45	703–48192–00	.WASHER 2 .RONDANA 2	1					
46	EL8–48233–00	.GEAR 2 .ENGRANAJE 2	1					
47	702–48235–00	.BUSHING .BUJE	1					
48	6X0–48153–00	.SHAFT, FREE ACCEL. .EJE	1					
49	6X3–48222–10	.GRIP, CONTROL LEVER .MANGO DE PALANCA CONTROL	1					
50	703–48227–00	.SPRING, NEUTRAL LOCK .RESORTE DE SEGURO	1					
51	98580–05008	.SCREW, PAN HEAD .TORNILLO DE CABEZA CRUZADA	1					
52	6X3–82563–02	.TRIM & TILT SWITCH ASSY .INTERRUPTOR DE INCLINACION	1					
53	6X0–48288–00	.WASHER, PLAIN .ARANDELA	1					
54	6X0–48127–00	.SCREW 1 .TORNILLO 1	1					

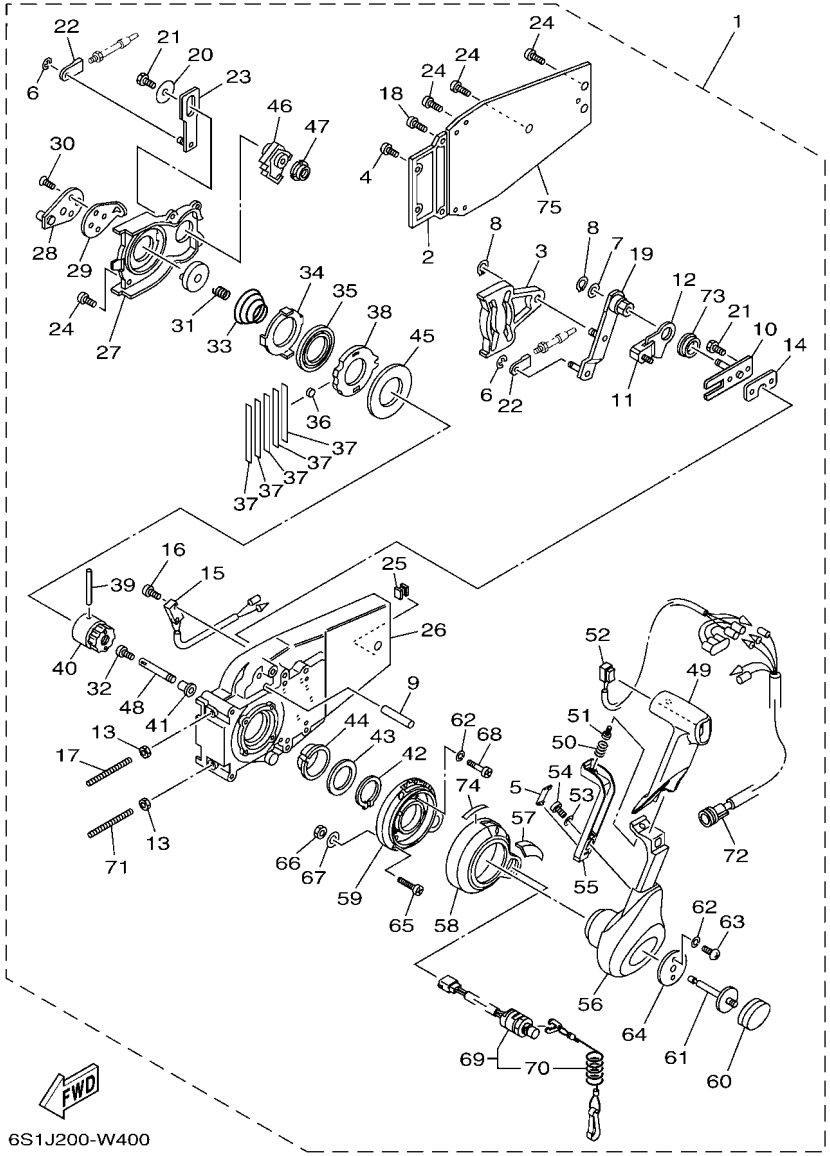

FIG. 40 REMOTE CONTROL ASSY 2 — CONTROL REMOTO COMPL 2

REF. NO.	PART NO. CODIGO Nº	DESCRIPTION DESCRIPCION	6S1M	CAR	6S2M			REMARKS OBSERVACIONES
55	6X0–48223–00	.LOCK, NEUTRAL .CERRADURA NEUTRO	1					
56	6X3–48221–10	.LEVER, CONTROL .PALANCA CONTROL	1					
57	6X3–48225–10	.COVER .CUBIERTA	1					
58	6X3–48225–00	.COVER .CUBIERTA	1					
59	6X3–48111–00	.BODY, REMOTE CONTROL 1 .EL CUERPO, EL TELEMANDO 1	1					
60	6X3–48225–30	.COVER .CUBIERTA	1					
61	6X0–48155–00	.PLUNGER .EMBOLO	1					
62	92990–05300	.WASHER, INTERNAL TOOTH .ARANDELA PLANA	6					
63	6X0–48281–00	.SCREW .TORNILLO 1	2					
64	6X0–48193–00	.WASHER 3 .RONDANA 3	1					
65	97890–06035	.SCREW, PAN HEAD .TORNILLO	3					UR UR
	6X0–48128–00	.SCREW(M6X30) .TORNILLO 2	3					UR UR
66	6X0–48156–00	.NUT 1 .TUERCA 1	3					
67	701–48287–00	.WASHER .ARANDELA	3					
68	6X3–48129–00	.SCREW 3 .TORNILLO 3	4					
69	6X3–82575–01	.ENGINE STOP SWITCH ASSY .INTERRUPTOR DE PARADA COMPL	1					
70	682–82556–00	..LANYARD, STOP SWITCH ..CORDON DE INTERRUPTOR PARADA	1					
71	704–48281–00	.SCREW .TORNILLO 1	1					
72	704–82541–10	.WIRE, LEAD .CABLE CONDUCTOR	1					
73	6X0–48116–00	.BUSHING .BUJE	1					
74	6X3–44191–00	.INDICATOR, SHIFT .INDICADOR DE CAMBIOS	1					
75	EL8–48213–00	.BACK PLATE 2 .PLACA TRASERA 2	1					

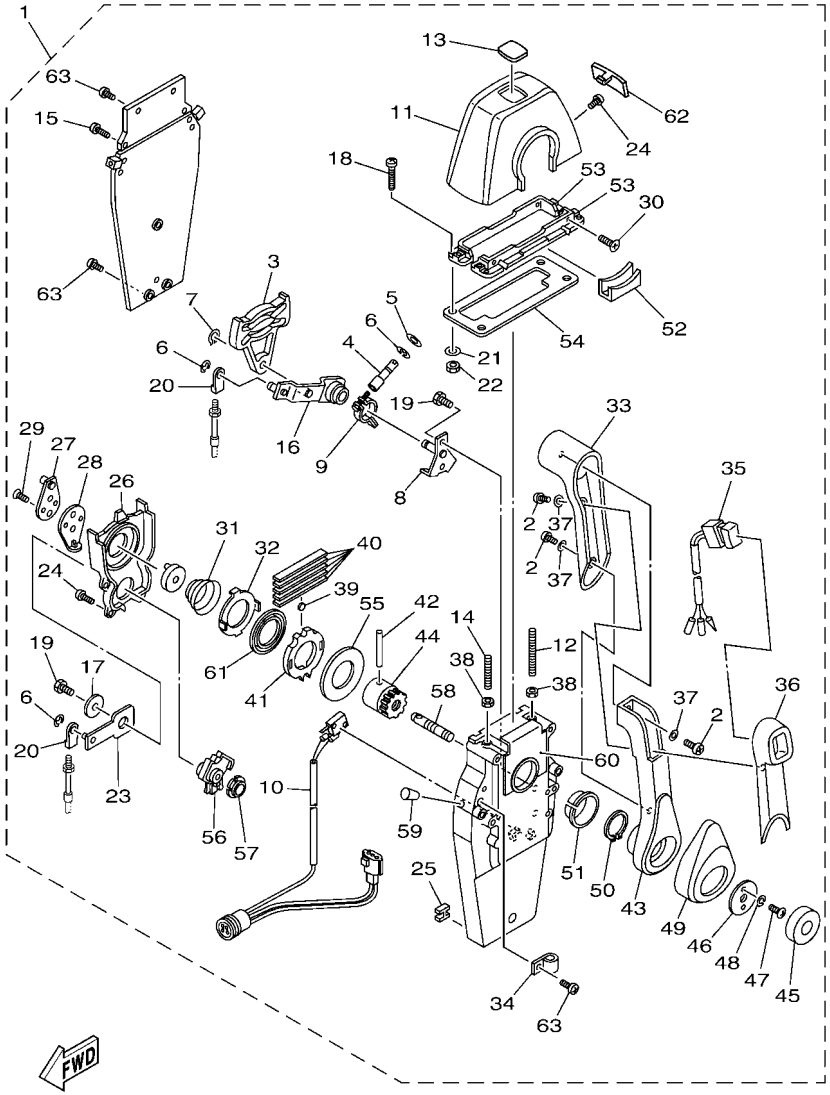

6DA5200-R430

FIG. 41 REMOTE CONTROL ASSY 3 — CONTROL REMOTO COMPL 3

REF. NO.	PART NO. CODIGO Nº	DESCRIPTION DESCRIPCION	6S1M	CAR	6S2M			REMARKS OBSERVACIONES
1	704–48205–R2	REMOTE CONTROL ASSY (R/H) REMOTO CONTROL COMPL. (R/H)		1				AP CAR WITH PT/T SW. AP CAR WITH PT/T SW.
2	704–48129–11	.SCREW 3 .TORNILLO 3		3				
3	EL8–48251–00	.PLATE, CAM .PLACA,LEVA		1				
4	704–48265–00	.SHAFT, FRICTION .EJE FRICCION		1				
5	701–48246–00	.SPACER .ESPACIADOR		1				
6	93430–06024	.CIRCLIP .SEGURO		4				
7	EL8–48259–00	.CIRCLIP 1 .SEGURO		1				
8	704–48262–00	.SHAFT, THROTTLE .EJE DE ACELERADOR		1				
9	704–48264–00	.THROTTLE, FRICTION .FRICCION DE ACELERADOR		1				
10	704–82540–40	.NEUTRAL SWITCH ASSY .INTERRUPTOR NEUTRAL COMPL		1				
11	704–48119–50	.COVER .CUBIERTA		1				
12	EL8–48281–00	.SCREW .TORNILLO 1		1				
13	704–48215–61	.GRAPHIC .CALCOMANIA 1		1				
14	704–48281–00	.SCREW .TORNILLO 1		1				
15	97890–05025	.SCREW, PAN HEAD .TORNILLO		2				
16	704–48261–00	.ARM, THROTTLE .BRAZO ACELERADOR		1				
17	EL8–48191–00	.WASHER 1 .ARANDELA		1				
18	704–48283–00	.SCREW .TORNILLO 3		4				
19	97380–06018	.BOLT .TORNILLO HEXAGONAL		3				
20	703–48345–01	.CABLE END, REMOTE CONTROL 2 .TERMINAL CABLE DE CONTROL REMO		2				
21	704–48287–00	.WASHER .ARANDELA		4				
22	95380–05600	.NUT .TUERCA		4				
23	704–48271–00	.ARM, SHIFT .BRAZO CAMBIADOR		1				
24	EL8–48127–00	.SCREW 1 .TORNILLO 1		10				
25	703–48358–01	.ANCHOR, CABLE .ABRAZADERA CABLE		1				
26	704–48231–00	.HOUSING, GEAR .CAJA,ENGRANAJE		1				
27	EL8–48241–00	.ARM, DRIVE .BRAZO,MANDO		1				

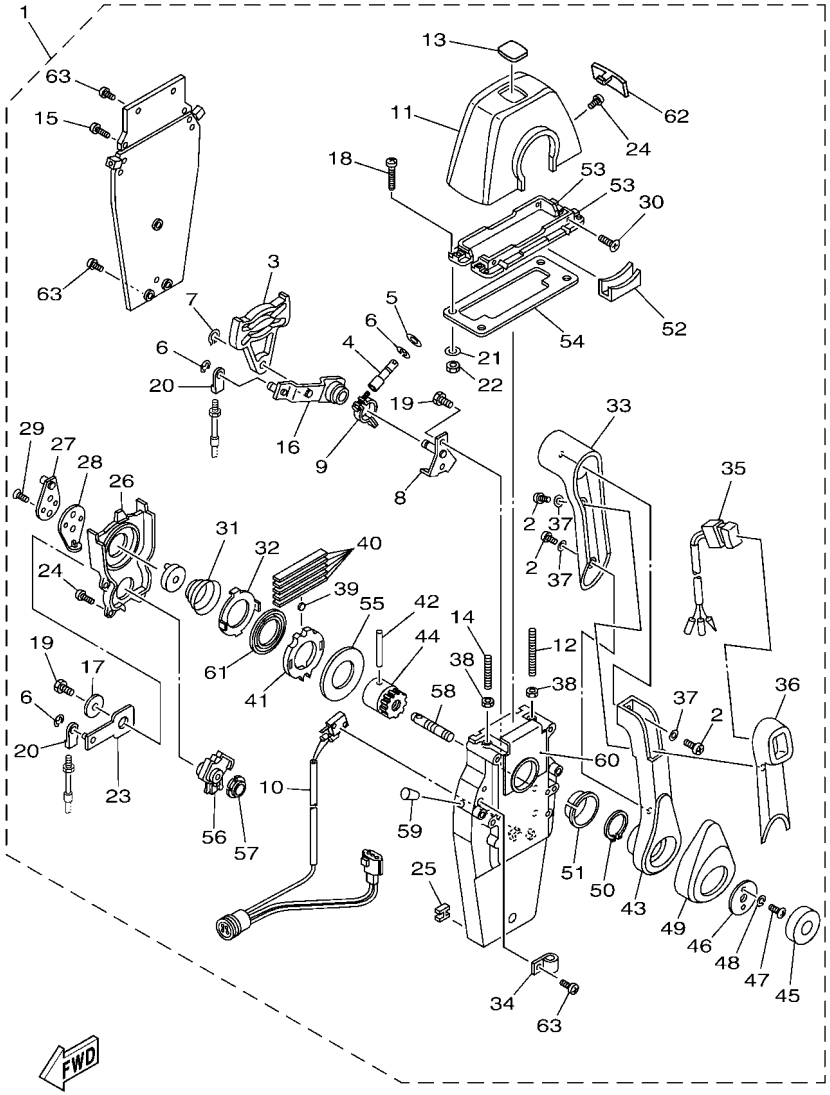

6DA5200-R430

FIG. 41 REMOTE CONTROL ASSY 3 — CONTROL REMOTO COMPL 3

REF. NO.	PART NO. CODIGO Nº	DESCRIPTION DESCRIPCION	6S1M	CAR	6S2M			REMARKS OBSERVACIONES
28	EL8–48254–00	.STOPPER, THROTTLE ADJUSTING .TAPON		1				
29	92780–06020	.SCREW, FLAT HEAD .TORNILLO CABEZA PLANA		2				
30	98780–05018	.SCREW, FLAT HEAD .TORNILLO, CABEZA PLANA		4				
31	EL8–48244–00	.SPRING, FREE ACCEL. .RESORTE ACELERADOR LIBRE		1				
32	EL8–48245–00	.PLATE, LOCK .PLACA CERRADURA		1				
33	704–48222–10	.GRIP, CONTROL LEVER .MANGO DE PALANCA CONTROL		1				
34	704–82594–00	.CLAMP .GRAMPA		1				
35	704–82563–60	.TRIM & TILT SWITCH ASSY .INTERRUPTOR DE INCLINACION		1				
36	704–48229–30	.GRIP, CONTROL LEVER .MANGO DE PALANCA CONTROL 2		1				
37	92990–05300	.WASHER, INTERNAL TOOTH .ARANDELA PLANA		3				
38	95380–06600	.NUT, HEXAGON .TUERCA		2				
39	701–48248–00	.ROLLER, FREE ACCEL. .RODILLO ACELERADOR LIBRE		1				
40	704–48238–00	.SPRING, DETENT .RESORTE		5				
41	704–48232–P1	.GEAR .ENGRANAJE 1		1				
42	EL8–48164–00	.PIN 2 .PASADOR 2		1				
43	704–48221–R0	.LEVER, CONTROL .PALANCA CONTROL		1				
44	704–48242–10	.SHAFT, DRIVE .EJE, PROPULSION		1				
45	704–48225–R0	.COVER .CUBIERTA		1				
46	704–48192–00	.WASHER 2 .RONDANA 2		1				
47	97890–06018	.SCREW, PAN HEAD .TORNILLO		2				
48	92990–06300	.WASHER, INTERNAL TOOTH .ARANDELA PLANA		2				
49	704–48224–R0	.COVER, CONTROL LEVER .CUBIERTA DE PALANCA CONTROL		1				
50	EL8–48279–00	.CIRCLIP 2 .SEGURO2		1				
51	704–48234–00	.BUSHING 1 .BUJE		1				
52	704–48219–R0	.COVER, LEAD .CUBIERTA		1				
53	704–48144–10	.PLATE, STOPPER 2 .PLACA, RETEN 2		2				
54	704–48176–01	.GROMMET .TOPON		1				

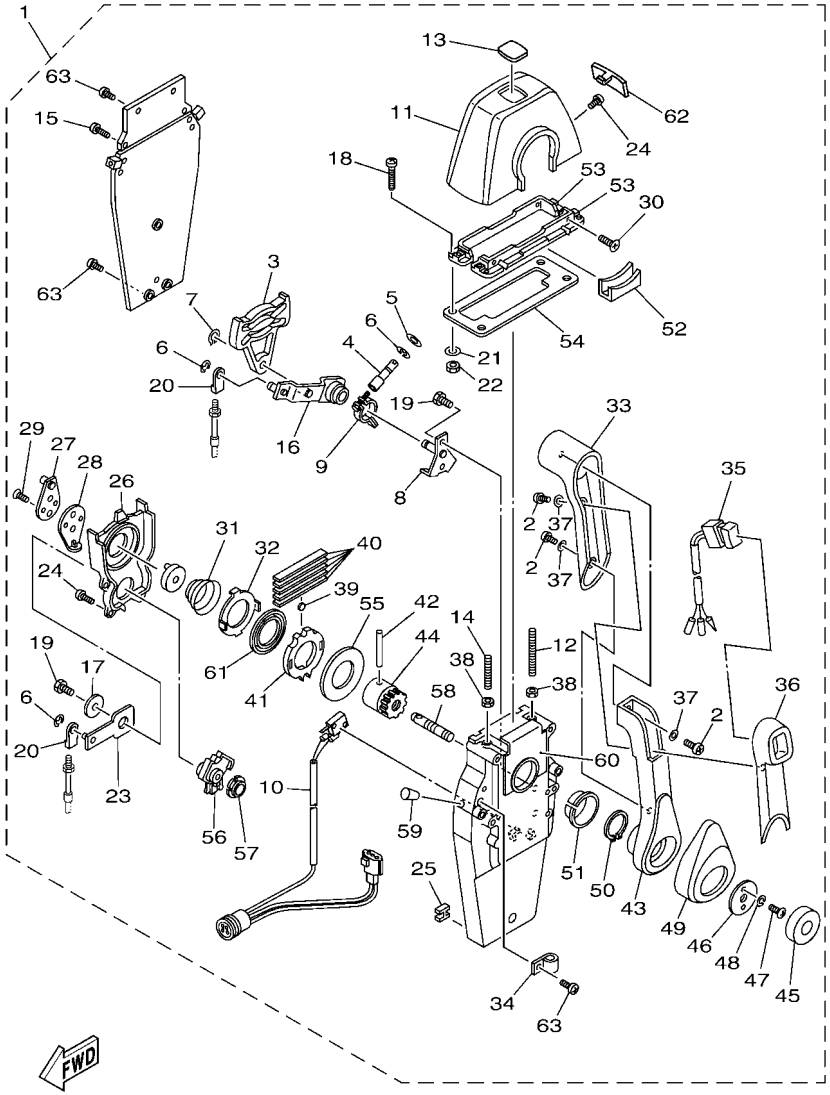

6DA5200-R430

FIG. 41 REMOTE CONTROL ASSY 3 — CONTROL REMOTO COMPL 3

REF. NO.	PART NO. CODIGO Nº	DESCRIPTION DESCRIPCION	6S1M	CAR	6S2M			REMARKS OBSERVACIONES
55	704–48192–P0	.WASHER 2 .RONDANA 2		1				
56	704–48233–00	.GEAR 2 .ENGRANAJE 2		1				
57	704–48235–00	.BUSHING .BUJE		1				
58	704–48153–00	.SHAFT, FREE ACCEL. .EJE		1				
59	704–48166–00	.PLUG .TAPON		1				
60	704–48284–P0	.GROMMET .TAPON		1				
61	704–48178–10	.PLATE, SHIFT .PLACA		1				
62	704–48167–20	.PLUG .TAPON AGUJERO		1				
63	97890–05016	.SCREW, PAN HEAD .TORNILLO		3				

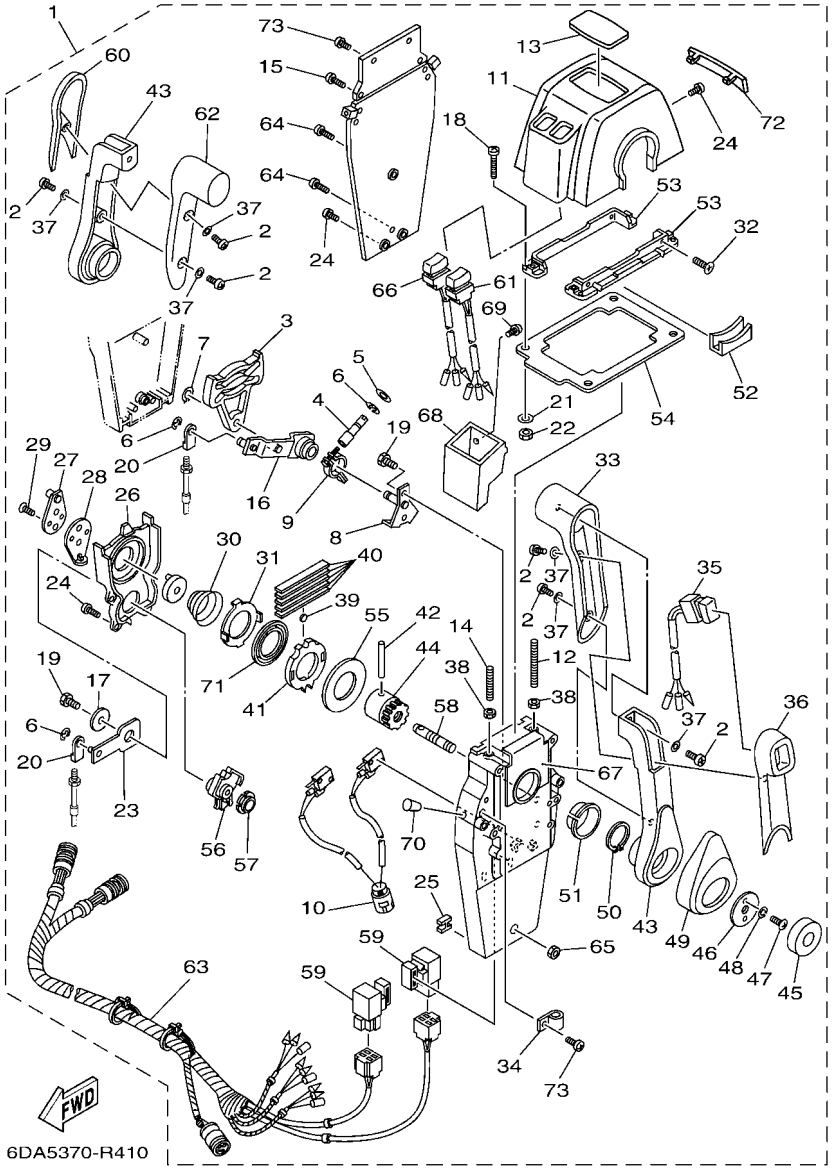

FIG. 42 REMOTE CONTROL ASSY 4 — CONTROL REMOTO COMPL 4

REF. NO.	PART NO. CODIGO Nº	DESCRIPTION DESCRIPCION	6S1M	CAR	6S2M			REMARKS OBSERVACIONES
1	704–48207–R2	REMOTE CONTROL ASSY REMOTO CONTROL COMPL.			1			AP EXCEPT NME WITH PT/T SW. AP EXCEPT NME WITH PT/T SW.
2	704–48129–11	.SCREW 3 .TORNILLO 3			6			
3	EL8–48251–00	.PLATE, CAM .PLACA,LEVA			2			
4	704–48265–00	.SHAFT, FRICTION .EJE FRICCION			2			
5	701–48246–00	.SPACER .ESPACIADOR			2			
6	93430–06024	.CIRCLIP .SEGURO			8			
7	EL8–48259–00	.CIRCLIP 1 .SEGURO			2			
8	704–48262–00	.SHAFT, THROTTLE .EJE DE ACELERADOR			2			
9	704–48264–00	.THROTTLE, FRICTION .FRICCION DE ACELERADOR			2			
10	704–82540–30	.NEUTRAL SWITCH ASSY .INTERRUPTOR NEUTRAL COMPL			1			
11	704–48119–60	.COVER .CUBIERTA			1			
12	EL8–48281–00	.SCREW .TORNILLO 1			2			
13	704–48215–70	.GRAPHIC .CALCOMANIA 1			1			
14	704–48281–00	.SCREW .TORNILLO 1			2			
15	97890–05025	.SCREW, PAN HEAD .TORNILLO			4			
16	704–48261–00	.ARM, THROTTLE .BRAZO ACELERADOR			2			
17	EL8–48191–00	.WASHER 1 .ARANDELA			2			
18	704–48283–00	.SCREW .TORNILLO 3			4			
19	97380–06018	.BOLT .TORNILLO HEXAGONAL			6			
20	703–48345–01	.CABLE END, REMOTE CONTROL 2 .TERMINAL CABLE DE CONTROL REMO			4			
21	704–48287–00	.WASHER .ARANDELA			4			
22	95380–05600	.NUT .TUERCA			4			
23	704–48271–00	.ARM, SHIFT .BRAZO CAMBIADOR			2			
24	EL8–48127–00	.SCREW 1 .TORNILLO 1			18			
25	703–48358–01	.ANCHOR, CABLE .ABRAZADERA CABLE			2			
26	704–48231–00	.HOUSING, GEAR .CAJA,ENGRANAJE			2			
27	EL8–48241–00	.ARM, DRIVE .BRAZO,MANDO			2			

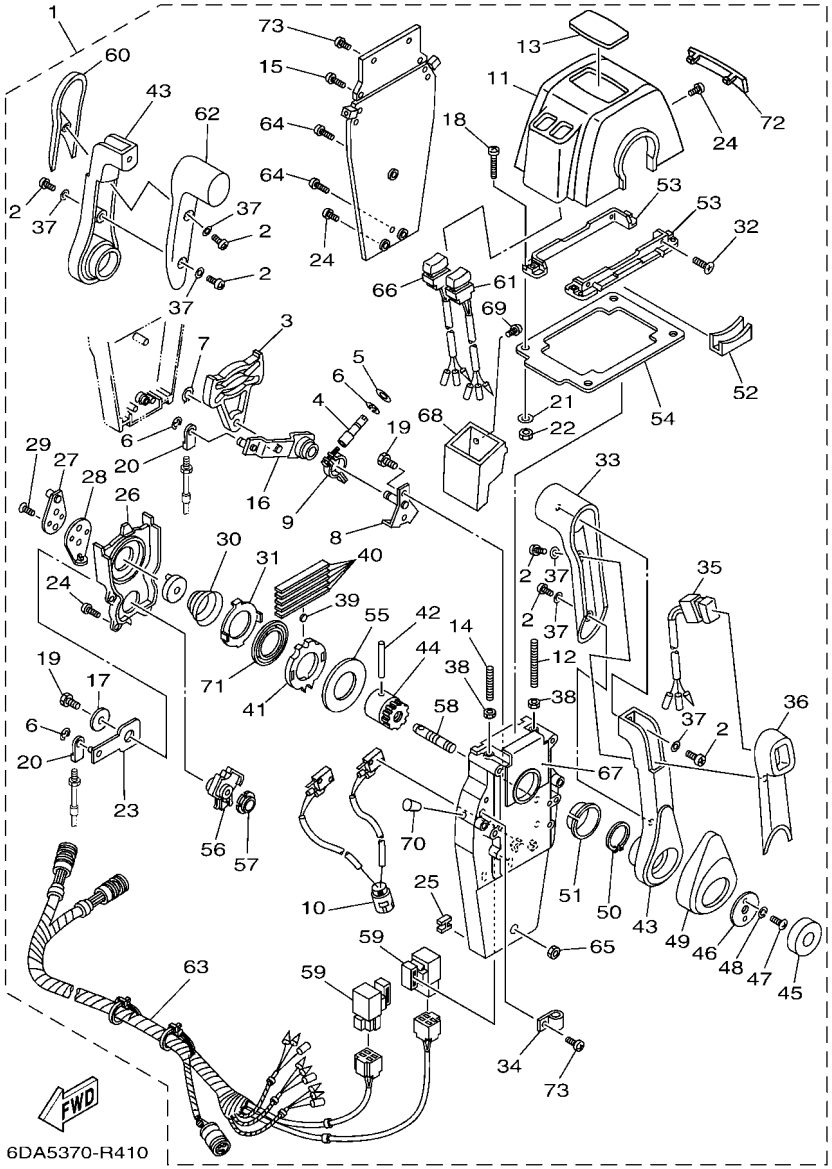

FIG. 42 REMOTE CONTROL ASSY 4 — CONTROL REMOTO COMPL 4

REF. NO.	PART NO. CODIGO Nº	DESCRIPTION DESCRIPCION	6S1M	CAR	6S2M			REMARKS OBSERVACIONES
28	EL8–48254–00	.STOPPER, THROTTLE ADJUSTING .TAPON			2			
29	92780–06020	.SCREW, FLAT HEAD .TORNILLO CABEZA PLANA			4			
30	EL8–48244–00	.SPRING, FREE ACCEL. .RESORTE ACELERADOR LIBRE			2			
31	EL8–48245–00	.PLATE, LOCK .PLACA CERRADURA			2			
32	98780–05018	.SCREW, FLAT HEAD .TORNILLO, CABEZA PLANA			4			
33	704–48222–30	.GRIP, CONTROL LEVER .MANGO DE PALANCA CONTROL			2			
34	704–82594–00	.CLAMP .GRAMPA			1			
35	704–82563–70	.TRIM & TILT SWITCH ASSY .INTERRUPTOR DE INCLINACION			1			
36	704–48229–30	.GRIP, CONTROL LEVER .MANGO DE PALANCA CONTROL 2			1			
37	92990–05300	.WASHER, INTERNAL TOOTH .ARANDELA PLANA			6			
38	95380–06600	.NUT, HEXAGON .TUERCA			4			
39	701–48248–00	.ROLLER, FREE ACCEL. .RODILLO ACELERADOR LIBRE			2			
40	704–48238–00	.SPRING, DETENT .RESORTE			10			
41	704–48232–P1	.GEAR .ENGRANAJE 1			2			
42	EL8–48164–00	.PIN 2 .PASADOR 2			2			
43	704–48221–R0	.LEVER, CONTROL .PALANCA CONTROL			2			
44	704–48242–10	.SHAFT, DRIVE .EJE, PROPULSION			2			
45	704–48225–R0	.COVER .CUBIERTA			2			
46	704–48192–00	.WASHER 2 .RONDANA 2			2			
47	97890–06018	.SCREW, PAN HEAD .TORNILLO			4			
48	92990–06300	.WASHER, INTERNAL TOOTH .ARANDELA PLANA			4			
49	704–48224–R0	.COVER, CONTROL LEVER .CUBIERTA DE PALANCA CONTROL			2			
50	EL8–48279–00	.CIRCLIP 2 .SEGURO2			2			
51	704–48234–00	.BUSHING 1 .BUJE			2			
52	704–48219–R0	.COVER, LEAD .CUBIERTA			2			
53	704–48144–20	.PLATE, STOPPER 2 .PLACA, RETEN 2			2			
54	704–48176–10	.GROMMET .TOPON			1			

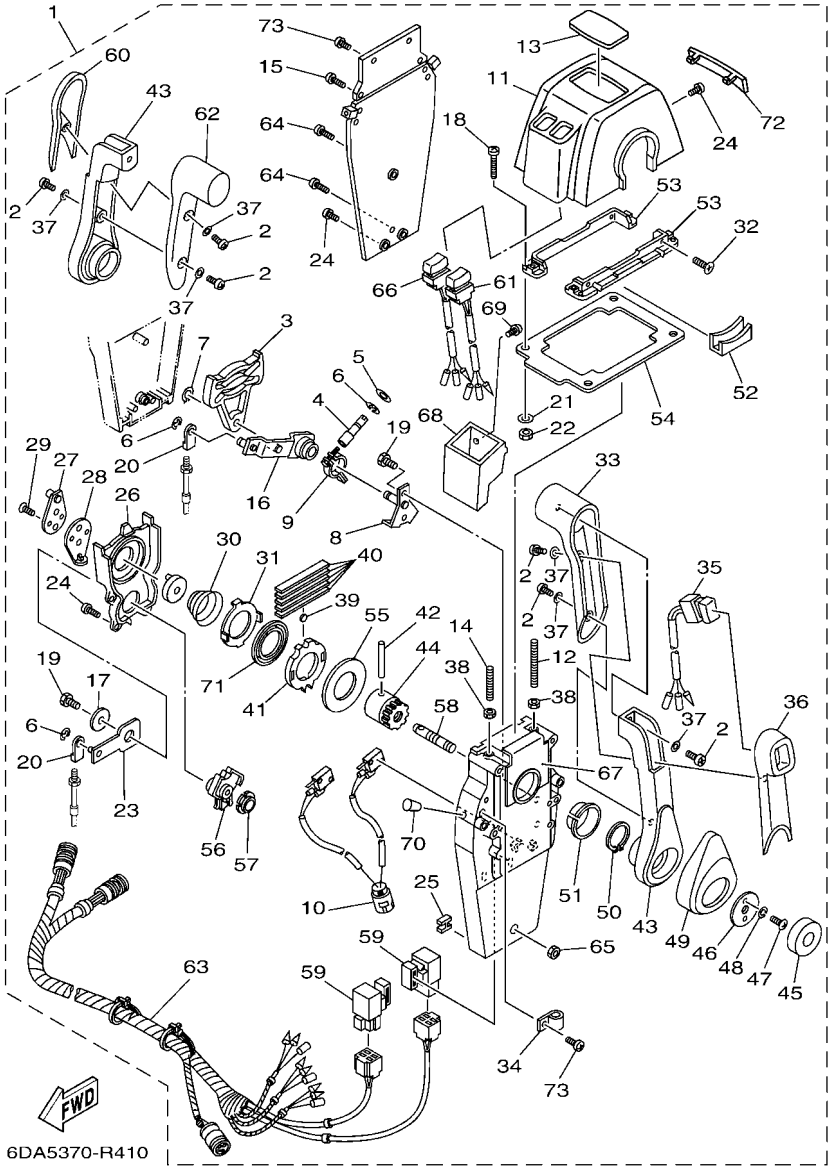

FIG. 42 REMOTE CONTROL ASSY 4 — CONTROL REMOTO COMPL 4

REF. NO.	PART NO. CODIGO Nº	DESCRIPTION DESCRIPCION	6S1M	CAR	6S2M			REMARKS OBSERVACIONES
55	704–48192–P0	.WASHER 2 .RONDANA 2			2			
56	704–48233–00	.GEAR 2 .ENGRANAJE 2			2			
57	704–48235–00	.BUSHING .BUJE			2			
58	704–48153–00	.SHAFT, FREE ACCEL. .EJE			2			
59	704–81950–11	.RELAY ASSY .RELE COMPLETO			2			
60	704–48229–20	.GRIP, CONTROL LEVER .MANGO DE PALANCA CONTROL 2			1			
61	704–82563–80	.TRIM & TILT SWITCH ASSY .INTERRUPTOR DE INCLINACION			1			
62	704–48222–20	.GRIP, CONTROL LEVER .MANGO DE PALANCA CONTROL			1			
63	704–82590–10	.WIRE HARNESS ASSY .CONJUNTO DE CABLES			1			
64	704–48128–00	.SCREW 2 .TORNILLO 2			3			
65	704–48156–00	.NUT 1 .TUERCA 1			1			
66	704–82563–90	.TRIM & TILT SWITCH ASSY .INTERRUPTOR DE INCLINACION			1			
67	704–48284–P0	.GROMMET .TAPON			2			
68	704–48285–20	.GROMMET 2 .TAPON 2			1			
69	704–48129–60	.SCREW 3 .TORNILLO 3			2			
70	704–48166–00	.PLUG .TAPON			2			
71	704–48178–00	.PLATE, SHIFT .PLACA			2			
72	704–48167–30	.PLUG .TAPON AGUJERO			1			
73	97890–05016	.SCREW, PAN HEAD .TORNILLO			5			

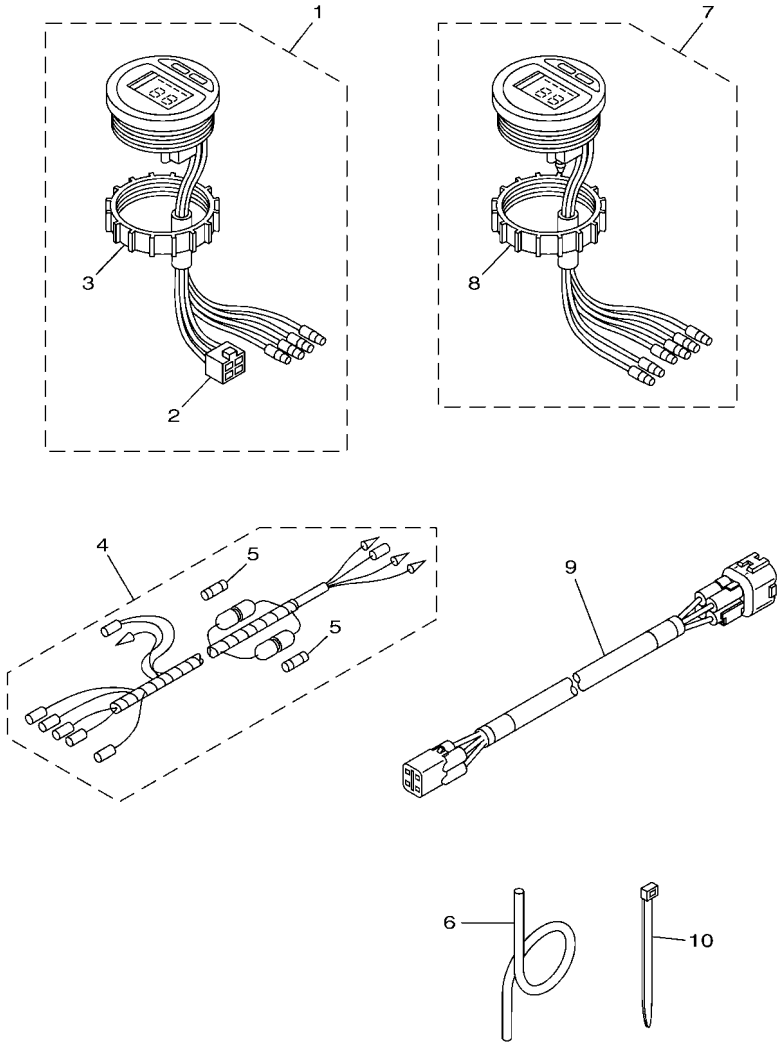

6S1G200-U420

FIG. 43 METER 1 — MEDIDOR 1

REF. NO.	PART NO. CODIGO Nº	DESCRIPTION DESCRIPCION	6S1M	CAR	6S2M			REMARKS OBSERVACIONES
1	6Y5–8350T–E3	TACHOMETER ASSY TACOMETRO COMPLETO	1					AP FOR CHN,OTH AP FOR CHN,OTH
2	9E450–04533	.CONNECTOR .CONECTOR	1					F-4-W F-4-W
3	6Y8–84383–00	.NUT, RING .TUERCA ANILLO	1					
4	6Y5–83553–M1	WIRE, LEAD (L=2.5M) CABLE CONDUCTOR (L=2.5M)	1					AP FOR OTH AP FOR OTH
	6Y5–83553–01	WIRE, LEAD (L=2.5M) CABLE CONDUCTOR (L=2.5M)	1					AP FOR CHN AP FOR CHN
5	6G1–82151–01	.FUSE (10A) .FUSIBLE (10A)	2					FOR 6Y5-83553-M1 FOR 6Y5-83553-M1
	6G1–82151–01	.FUSE (10A) .FUSIBLE (10A)	1					FOR 6Y5-83553-01 FOR 6Y5-83553-01
6	6Y5–83557–10	TUBE (8M) TUBO (8M)	1					AP FOR OTH AP FOR OTH
7	6Y5–83570–A3	SPEEDOMETER ASSY VELOCIMETRO COMPLETO	1					AP FOR OTH AP FOR OTH
8	6Y8–84383–00	.NUT, RING .TUERCA ANILLO	1					
9	6Y5–83653–30	WIRE, LEAD (L=8.0M) CABLE CONDUCTOR (L=8.0M)	1					AP FOR CHN,OTH 4P,8M AP FOR CHN,OTH 4P,8M
10	90465–11M10	CLAMP BRIDA	2					AP FOR OTH AP FOR OTH

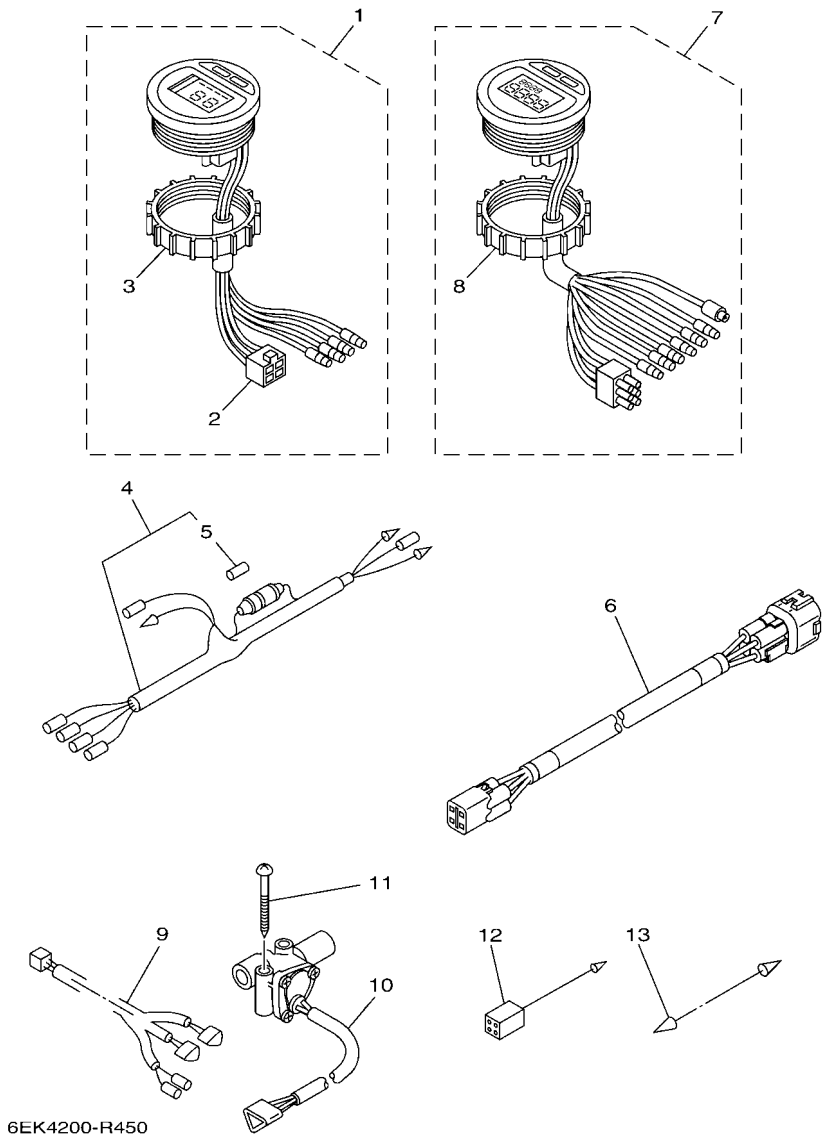

FIG. 44 METER 2 — MEDIDOR 2

REF. NO.	PART NO. CODIGO Nº	DESCRIPTION DESCRIPCION	6S1M	CAR	6S2M			REMARKS OBSERVACIONES
1	6Y5–8350T–E3	TACHOMETER ASSY TACOMETRO COMPLETO			1			AP FOR CHN,OTH AP FOR CHN,OTH
2	9E450–04533	.CONNECTOR .CONECTOR			1			F-4-W F-4-W
3	6Y8–84383–00	.NUT, RING .TUERCA ANILLO			1			
4	6Y5–83553–01	WIRE, LEAD (L=2.5M) CABLE CONDUCTOR (L=2.5M)			1			AP FOR CHN,OTH AP FOR CHN,OTH
5	6G1–82151–01	.FUSE (10A) .FUSIBLE (10A)			1			
6	6Y5–83653–40	WIRE, LEAD (L=9.0M) CABLE CONDUCTOR (L=9.0M)			1			AP FOR CHN,OTH 4P,9M AP FOR CHN,OTH 4P,9M
7	6Y5–8350F–B4	FUEL METER MOVEMENT ASSY MEDIDOR DE GESTION COMBUSTIBLE			1			AP FOR CHN,OTH AP FOR CHN,OTH
8	6Y8–84383–00	.NUT, RING .TUERCA ANILLO			1			
9	6Y5–83553–F2	WIRE, LEAD (L=8.0M) CABLE CONDUCTOR (L=8.0M)			1			AP FOR CHN,OTH AP FOR CHN,OTH
10	6Y5–85752–02	SENDER UNIDAD TRANSM. MED. COMBUST.			2			AP FOR CHN,OTH AP FOR CHN,OTH
11	90158–06003	SCREW, WOOD TORNILLO DE MADERA			4			AP FOR CHN,OTH AP FOR CHN,OTH
12	6Y5–82117–00	WIRE, LEAD (BLACK) (L300) CABLE, CONDUCTOR (NEGRO)			1			AP FOR CHN,OTH AP FOR CHN,OTH
13	703–82531–00	WIRE, LEAD (L70) CABLE CONDUCTOR (L70)			1			AP FOR CHN,OTH AP FOR CHN,OTH

FIG. 45 SWITCH & PANEL 1 — PANEL DE INTERRUPTOR 1

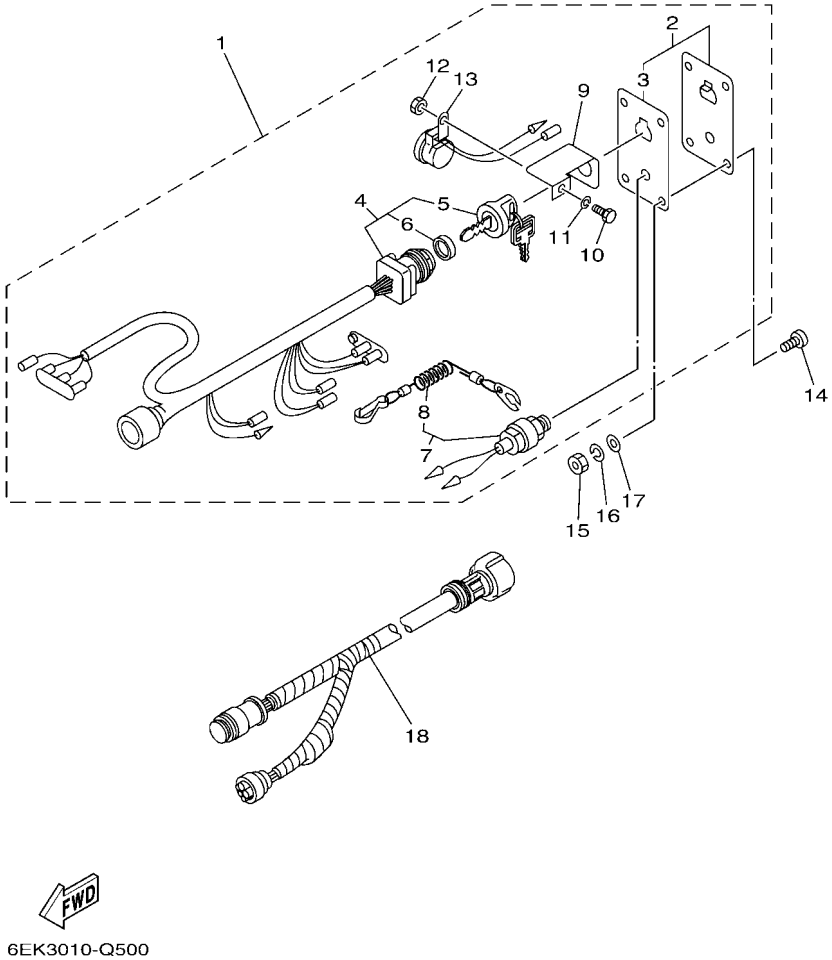

REF. NO.	PART NO. CODIGO Nº	DESCRIPTION DESCRIPCION	6S1M	CAR	6S2M			REMARKS OBSERVACIONES
1	6R5–82570–0A	PANEL SWITCH ASSY INTERRUPTOR DE PANEL COMPL.		1				AP FOR CAR AP FOR CAR
2	704–82571–02	.PANEL, SWITCH .PANEL DE INTERRUPTOR		1				
3	6R5–82588–01	..PLATE ..PLACA		1				
4	6R5–82510–04	.MAIN SWITCH ASSY .CONJUNTO DE LLAVE IGNICION		1				
5	676–82577–01	..CAP, KEY ..TAPA		1				
6	703–82532–00	..CAP ..TAPA		1				
7	688–82575–02	.ENGINE STOP SWITCH ASSY .INTERRUPTOR DE PARADA COMPL		1				
8	682–82556–00	..LANYARD, STOP SWITCH ..CORDON DE INTERRUPTOR PARADA		1				
9	64D–82581–00	.STAY, CORD CLAMP .SOPORTE DE GRAMPA DE CABLE		1				
10	97303–05012	.BOLT .TORNILLO		1				
11	92903–05100	.WASHER, SPRING .RONDANA SENCILLA		1				
12	95303–05700	.NUT .TUERCA		1				
13	6R5–83383–00	.BUZZER .ZUMBADOR		1				
14	90149–05M05	SCREW TORNILLO DE REGLAJE		4				AP FOR CAR AP FOR CAR
15	95303–05600	NUT TUERCA		4				AP FOR CAR AP FOR CAR
16	92903–05100	WASHER, SPRING RONDANA SENCILLA		4				AP FOR CAR AP FOR CAR
17	92903–05600	WASHER, PLATE RONDANA SENCILLA		4				AP FOR CAR AP FOR CAR
18	6K1–8258A–41	EXTENSION, WIRE HARNESS (8M) EXTENSION, ARNES DE CABLES (8M		1				AP FOR CAR (10P) AP FOR CAR (10P)

FIG. 46 SWITCH & PANEL 2 — PANEL DE INTERRUPTOR 2

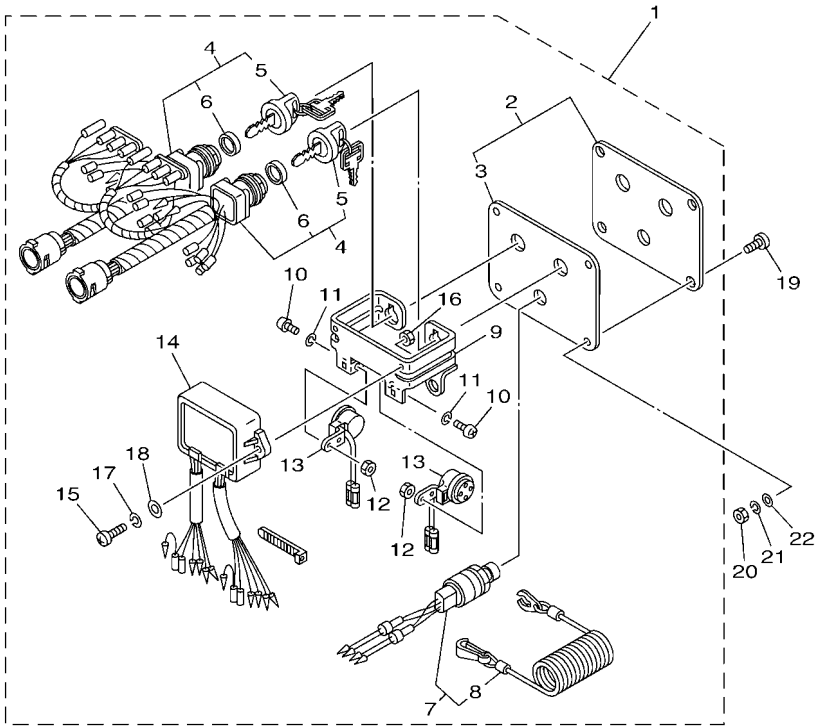

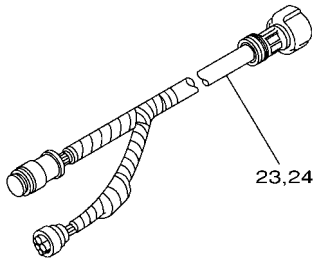

6BM4200-L380

REF. NO.	PART NO. CODIGO Nº	DESCRIPTION DESCRIPCION	6S1M	CAR	6S2M			REMARKS OBSERVACIONES
1	61B–82570–0A	PANEL SWITCH ASSY INTERRUPTOR DE PANEL COMPL.			1			AP FOR CHN,OTH AP FOR CHN,OTH
2	6K1–82571–02	.PLATE, PANEL SWITCH .PANEL DE INTERRUPTOR			1			
3	61B–82588–01	..PLATE ..PLACA			1			
4	61B–82510–03	.MAIN SWITCH ASSY .CONJUNTO DE LLAVE IGNICION			2			
5	676–82577–01	..CAP, KEY ..TAPA			1			
6	703–82532–00	..CAP ..TAPA			1			
7	6K1–82575–01	.ENGINE STOP SWITCH ASSY .INTERRUPTOR DE PARADA COMPL			1			
8	682–82556–00	..LANYARD, STOP SWITCH ..CORDON DE INTERRUPTOR PARADA			1			
9	6K1–83614–01	.BRACKET .SOPORTE			1			
10	98980–05010	.SCREW, BIND .TORNILLO DE LIGAR			2			
11	92990–05100	.WASHER, SPRING .ARANDELA PLANA			2			
12	95380–05600	.NUT .TUERCA			2			
13	6R5–83383–00	.BUZZER .ZUMBADOR			2			
14	61B–85830–03	.CONTROL UNIT ASSY .UNIDAD CONTROL			1			
15	98980–06020	.SCREW, BIND .TORNILLO DE LIGAR			2			
16	95380–06600	.NUT, HEXAGON .TUERCA			2			
17	92990–06100	.WASHER, SPRING .ARANDELA PLANA			2			
18	92990–06600	.WASHER, PLATE .ARANDELA PLANA			2			
19	90149–05M05	SCREW TORNILLO DE REGLAJE			4			AP FOR CHN,OTH AP FOR CHN,OTH
20	95380–05600	NUT TUERCA			4			AP FOR CHN,OTH AP FOR CHN,OTH
21	92990–05100	WASHER, SPRING ARANDELA PLANA			4			AP FOR CHN,OTH AP FOR CHN,OTH
22	92990–05600	WASHER, PLAIN ARANDELA PLANA			4			AP FOR CHN,OTH AP FOR CHN,OTH
23	6K1–8258A–41	EXTENSION, WIRE HARNESS (8M) EXTENSION, ARNES DE CABLES (8M			1			AP FOR CHN,OTH (10P) AP FOR CHN,OTH (10P)
24	61B–8258A–02	EXTENSION, WIRE HARNESS (9.5M) EXTENSION, ARNES DE CABLES(9.5			1			AP FOR CHN,OTH (10P) AP FOR CHN,OTH (10P)

FIG. 47 OPTIONAL PARTS 1 — PARTES OPCIONALES 1

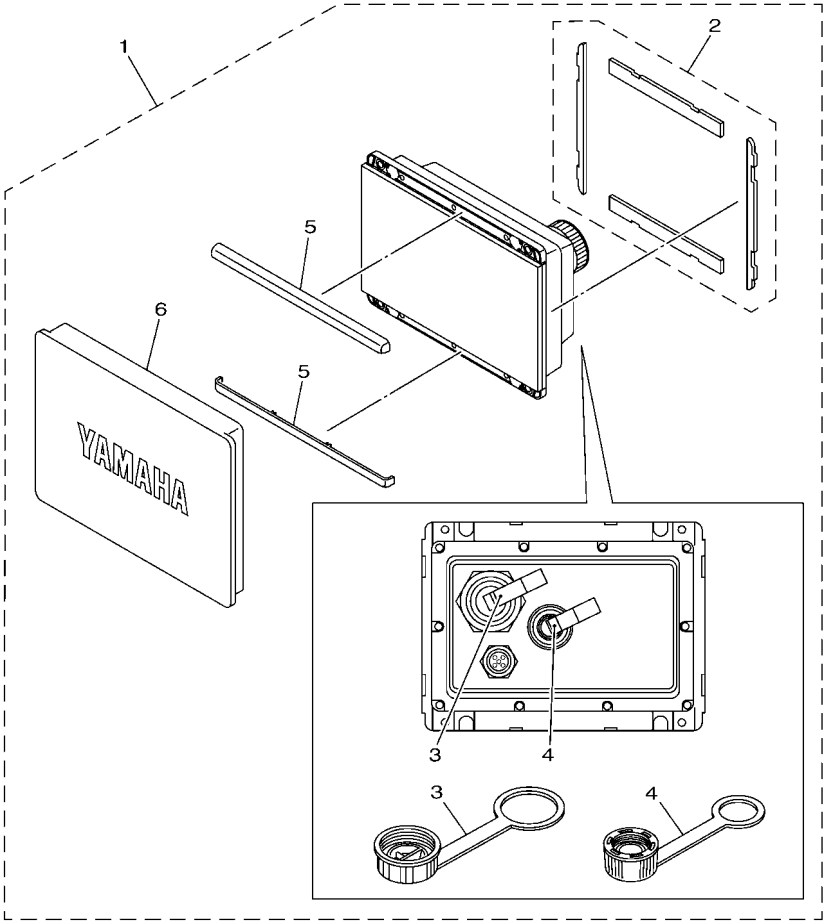

6ALH300-V410

REF. NO.	PART NO. CODIGO Nº	DESCRIPTION DESCRIPCION	6S1M	CAR	6S2M			REMARKS OBSERVACIONES
1	6YM–83710–18	CL5 DISPLAY (W/O WIFI) CL5 PANTALLA (W/O WIFI)	1					FOR MDV,OTH WITHOUT Wi-Fi FOR MDV,OTH WITHOUT Wi-Fi
2	6YM–22480–00	.SEAL ASSY .JUEGO DE JUNTO	1					
3	6YM–83956–00	.CAP 1 .TAPA 1	1					
4	6YD–83957–00	.CAP 2 .TAPA 2	1					
5	6YM–83512–00	.RIM .ANILLO	2					
6	6YM–87278–00	.COVER, METER .CUBIERTA DE MEDIDOR	1					

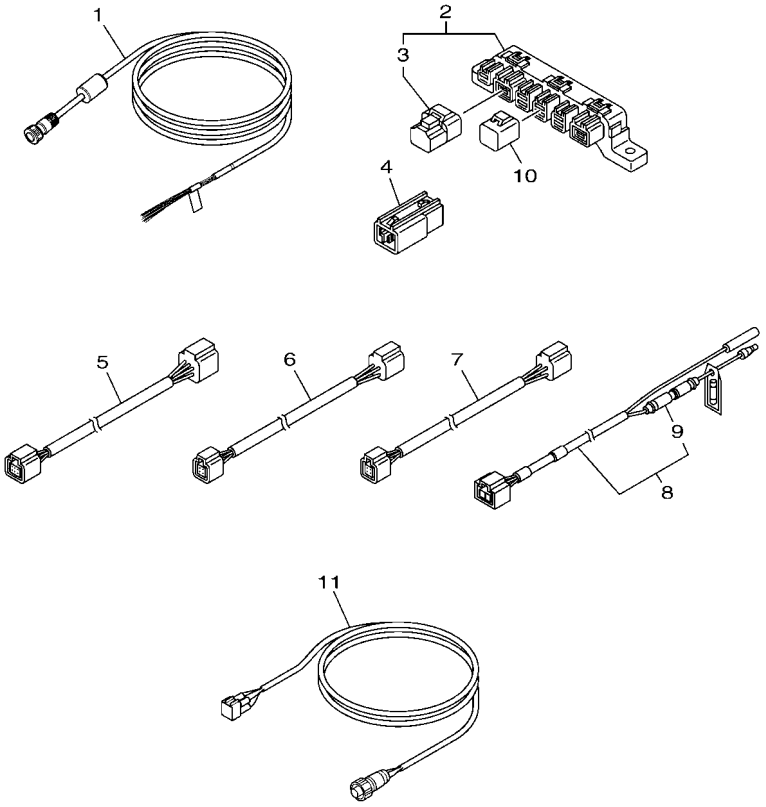

6ALH300-V420

FIG. 48 OPTIONAL PARTS 2 — PARTES OPCIONALES 2

REF. NO.	PART NO. CODIGO Nº	DESCRIPTION DESCRIPCION	6S1M	CAR	6S2M			REMARKS OBSERVACIONES
1	6YD–8356N–00	WIRE, LEAD CABLE CONDUCTOR	1					FOR MDV,OTH FOR MDV,OTH
2	6Y8–81920–01	MULTI HUB ASSY TERMINAL COMPLETO	1					FOR MDV,OTH FOR MDV,OTH
3	6Y8–85371–01	.END OF LINE RESISTOR .RESISTENCIA DE FIN DE LINEA	1					
4	6Y8–81920–11	IN-LINE HUB ASSY TERMINAL COMPLETO	1					FOR MDV,OTH FOR MDV,OTH
5	6Y8–82553–31	25FT MAIN BUS CABLE	1					FOR MDV,OTH FOR MDV,OTH
6	6Y8–82521–11	2FT PIGTAIL BUS CABLE CONDUCTOR	1					FOR MDV,OTH FOR MDV,OTH
7	6Y8–82521–51	12FT PIGTAIL BUS CABLE CONDUCTOR	1					FOR MDV,OTH FOR MDV,OTH
8	6Y8–83553–02	8FT POWER WIRE CABLE CONDUCTOR	1					FOR MDV,OTH FOR MDV,OTH
9	6G1–82151–01	.FUSE (10A) .FUSIBLE (10A)	1					
10	6Y8–82582–11	CAP 1 (4PIN) TAPA 1 (4P)	2					FOR MDV,OTH FOR MDV,OTH
11	6YM–83553–01	CONVERSION HARNESS CABLE CONDUCTOR	1					FOR MDV,OTH FOR MDV,OTH

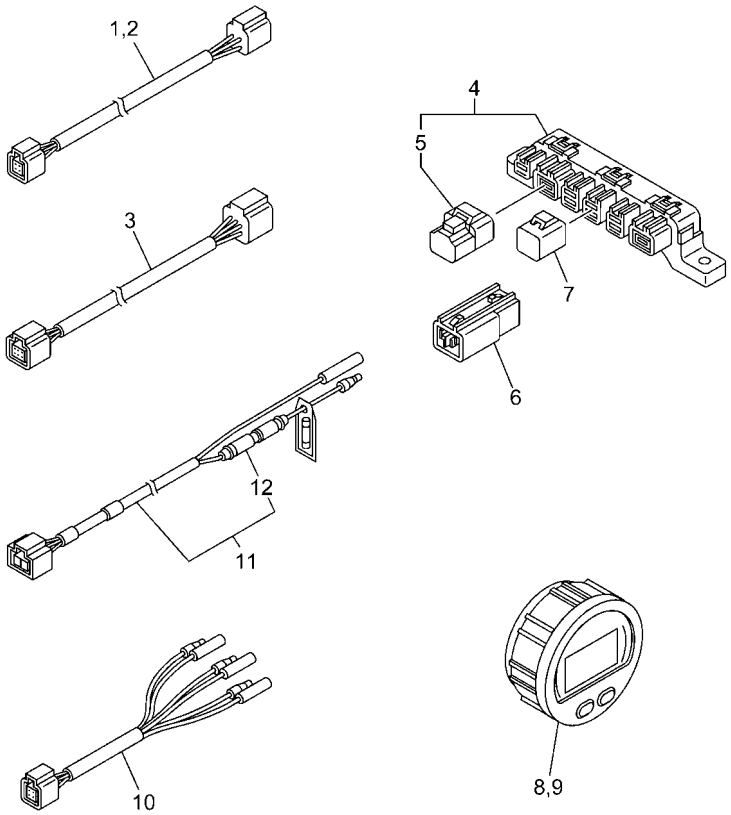

6EKA200-X550

FIG. 49 OPTIONAL PARTS 3 — PARTES OPCIONALES 3

REF. NO.	PART NO. CODIGO Nº	DESCRIPTION DESCRIPCION	6S1M	CAR	6S2M			REMARKS OBSERVACIONES
1	6Y8–82521–11	2FT PIGTAIL BUS CABLE CONDUCTOR	2	2				FOR CAR,AFR,BRA FOR CAR,AFR,BRA
2	6Y8–82521–51	12FT PIGTAIL BUS CABLE CONDUCTOR	1	1				FOR CAR,AFR FOR CAR,AFR
	6Y8–82521–31	6FT PIGTAIL BUS CABLE CONDUCTOR	1					FOR BRA FOR BRA
3	6Y8–82553–31	25FT MAIN BUS CABLE	1	1				FOR CAR,AFR FOR CAR,AFR
	6Y8–82553–21	20FT MAIN BUS CABLE	1					FOR BRA FOR BRA
4	6Y8–81920–01	MULTI HUB ASSY TERMINAL COMPLETO	1	1				FOR CAR,AFR,BRA FOR CAR,AFR,BRA
5	6Y8–85371–01	.END OF LINE RESISTOR .RESISTENCIA DE FIN DE LINEA	1	1				
6	6Y8–81920–11	IN-LINE HUB ASSY TERMINAL COMPLETO	1	1				FOR CAR,AFR,BRA FOR CAR,AFR,BRA
7	6Y8–82582–11	CAP 1 (4PIN) TAPA 1 (4P)	1	1				FOR CAR,AFR,BRA FOR CAR,AFR,BRA
8	6Y8–8350T–24	TACHOMETER, RD TACOMETRO COMPLETO	1	1				FOR CAR,AFR,BRA FOR CAR,AFR,BRA
9	6Y8–83500–24	S & FM METER, RD METRO COMPLETO	1	1				FOR CAR,AFR,BRA FOR CAR,AFR,BRA
10	6Y8–8356N–01	LEAD, FUEL TANK & GPS SENDER CABLE CONDUCTOR	1	1				FOR CAR,AFR,BRA FOR CAR,AFR,BRA
11	6Y8–83553–02	8FT POWER WIRE CABLE CONDUCTOR	1	1				FOR CAR,AFR,BRA FOR CAR,AFR,BRA
12	6G1–82151–01	.FUSE (10A) .FUSIBLE (10A)	1	1				

FIG. 50 OPTIONAL PARTS 4 — PARTES OPCIONALES 4

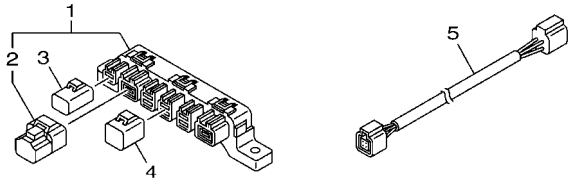

6ALH300-V430

REF. NO.	PART NO. CODIGO Nº	DESCRIPTION DESCRIPCION	6S1M	CAR	6S2M			REMARKS OBSERVACIONES
1	6Y8–81920–01	MULTI HUB ASSY TERMINAL COMPLETO			1			FOR OTH FOR OTH
2	6Y8–85371–01	.END OF LINE RESISTOR .RESISTENCIA DE FIN DE LINEA			1			
3	6Y8–82582–01	CAP 1 (2PIN) TAPA 1			1			FOR OTH FOR OTH
4	6Y8–82582–11	CAP 1 (4PIN) TAPA 1 (4P)			3			FOR OTH FOR OTH
5	6Y8–82521–51	12FT PIGTAIL BUS CABLE CONDUCTOR			1			FOR OTH FOR OTH

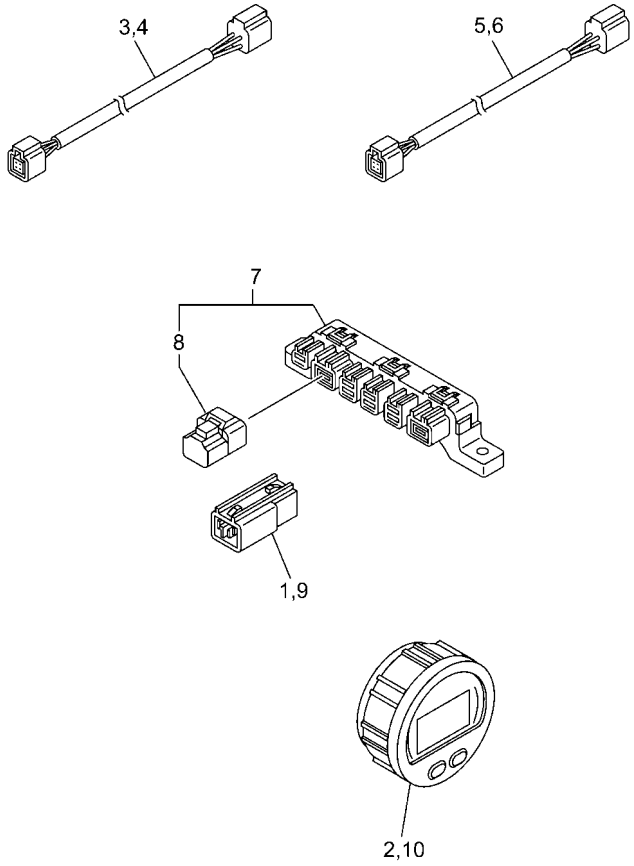

6S1K200-X510

FIG. 51 OPTIONAL PARTS 5 — PARTES OPCIONLES 5

REF. NO.	PART NO. CODIGO Nº	DESCRIPTION DESCRIPCION	6S1M	CAR	6S2M			REMARKS OBSERVACIONES
1	6Y8–81920–11	IN-LINE HUB ASSY TERMINAL COMPLETO			4			FOR CAR FOR CAR
2	6Y8–8350T–24	TACHOMETER, RD TACOMETRO COMPLETO			1			FOR CAR FOR CAR
3	6Y8–82521–11	2FT PIGTAIL BUS CABLE CONDUCTOR			2			FOR CAR FOR CAR
4	6Y8–82521–51	12FT PIGTAIL BUS CABLE CONDUCTOR			1			FOR CAR FOR CAR
5	6Y8–82521–11	2FT PIGTAIL BUS CABLE CONDUCTOR			1			FOR BRA FOR BRA
6	6Y8–82521–31	6FT PIGTAIL BUS CABLE CONDUCTOR			1			FOR BRA FOR BRA
7	6Y8–81920–01	MULTI HUB ASSY TERMINAL COMPLETO			1			FOR BRA FOR BRA
8	6Y8–85371–01	.END OF LINE RESISTOR .RESISTENCIA DE FIN DE LINEA			1			
9	6Y8–81920–11	IN-LINE HUB ASSY TERMINAL COMPLETO			1			FOR BRA FOR BRA
10	6Y8–8350T–24	TACHOMETER, RD TACOMETRO COMPLETO			1			FOR BRA FOR BRA

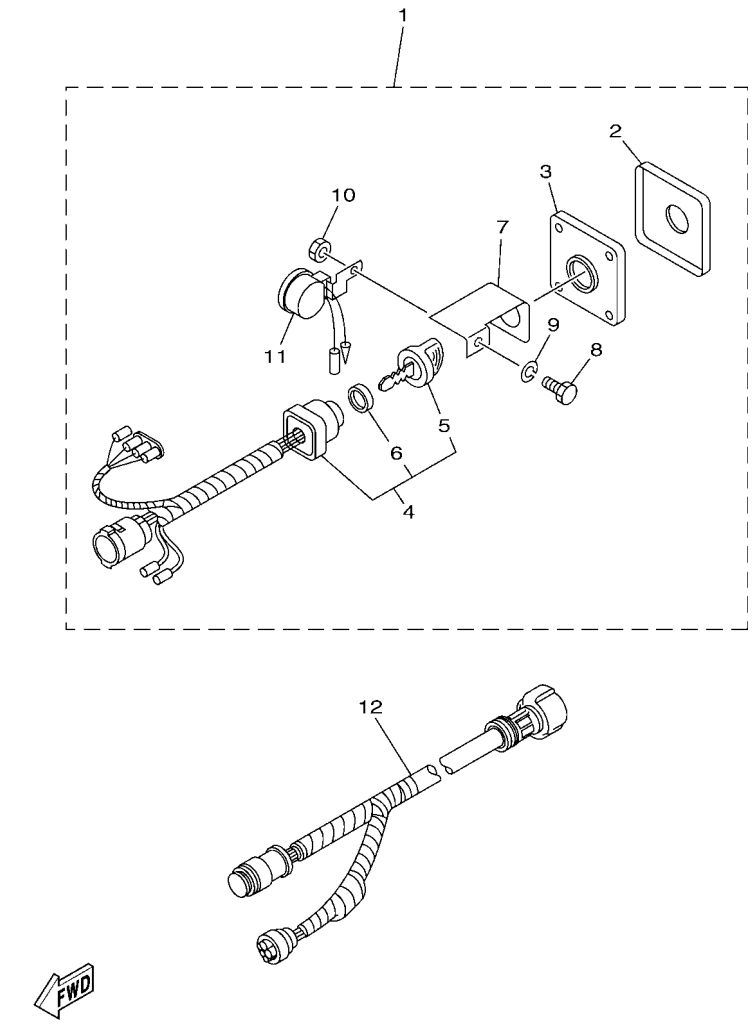

FIG. 52 OPTIONAL PARTS 6 — PARTES OPCIONALES 6

REF. NO.	PART NO. CODIGO Nº	DESCRIPTION DESCRIPCION	6S1M	CAR	6S2M			REMARKS OBSERVACIONES
1	64D–82570–23	PANEL SWITCH ASSY INTERRUPTOR DE PANEL COMPL.	1					FOR BRA FOR BRA
2	64D–82571–00	.PANEL, SWITCH .PANEL DE INTERRUPTOR	1					
3	64D–82588–00	.PLATE .PLACA	1					
4	64D–82510–21	.MAIN SWITCH ASSY .CONJUNTO DE LLAVE IGNICION	1					
5	703–82577–00	..CAP, KEY ..TAPA	1					
6	6K1–82532–00	..CAP ..TAPA	1					
7	64D–82581–00	.STAY, CORD CLAMP .SOPORTE DE GRAMPA DE CABLE	1					
8	97303–05012	.BOLT .TORNILLO	1					
9	92903–05100	.WASHER, SPRING .RONDANA SENCILLA	1					
10	95303–05700	.NUT .TUERCA	1					
11	688–83383–12	.BUZZER .ZUMBADOR	1					
12	6K1–8258A–41	EXTENSION, WIRE HARNESS (8M) EXTENSION, ARNES DE CABLES (8M	1					FOR BRA (10P) FOR BRA (10P)

FIG. 53 OPTIONAL PARTS 7 — PARTES OPCIONALES 7

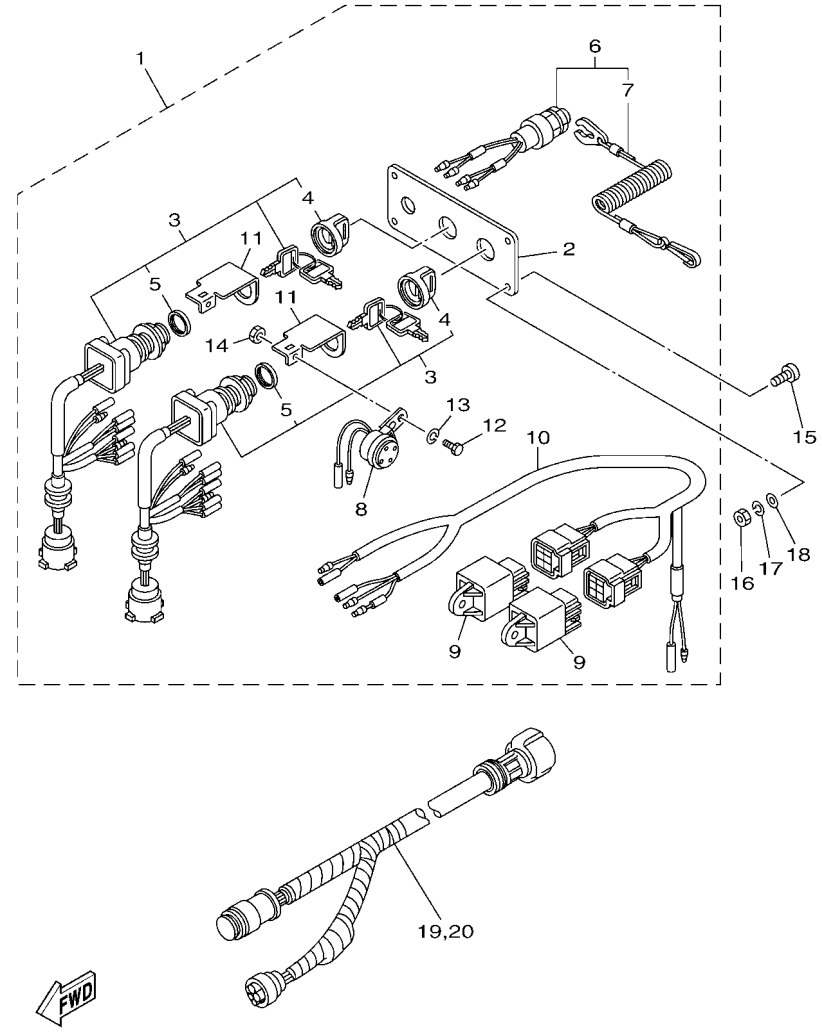

REF. NO.	PART NO. CODIGO Nº	DESCRIPTION DESCRIPCION	6S1M	CAR	6S2M			REMARKS OBSERVACIONES
1	6Y8–82570–05	PANEL SWITCH ASSY INTERRUPTOR DE PANEL COMPL.			1			FOR CAR,OTH FOR CAR,OTH
2	6Y8–82571–01	.PLATE, PANEL SWITCH .PANEL DE INTERRUPTOR			1			
3	6Y8–82510–03	.MAIN SWITCH ASSY .CONJUNTO DE LLAVE IGNICION			2			
4	676–82577–01	..CAP, KEY ..TAPA			1			
5	703–82532–00	..CAP ..TAPA			1			
6	6K1–82575–01	.ENGINE STOP SWITCH ASSY .INTERRUPTOR DE PARADA COMPL			1			
7	682–82556–00	..LANYARD, STOP SWITCH ..CORDON DE INTERRUPTOR PARADA			1			
8	6R5–83383–00	.BUZZER .ZUMBADOR			2			
9	68V–81950–00	.RELAY ASSY .RELE COMPLETO			2			
10	6Y8–82507–00	.LEAD, IGNITION SWITCH RELAY .CABLE CONDUCTOR			1			
11	64D–82581–00	.STAY, CORD CLAMP .SOPORTE DE GRAMPA DE CABLE			2			
12	97003–05012	.BOLT .PERNO			2			
13	92903–05100	.WASHER, SPRING .RONDANA SENCILLA			2			
14	95303–05700	.NUT .TUERCA			2			
15	90149–05M05	SCREW TORNILLO DE REGLAJE			4			FOR CAR,OTH FOR CAR,OTH
16	95380–05600	NUT TUERCA			4			FOR CAR,OTH FOR CAR,OTH
17	92990–05100	WASHER, SPRING ARANDELA PLANA			4			FOR CAR,OTH FOR CAR,OTH
18	92990–05600	WASHER, PLAIN ARANDELA PLANA			4			FOR CAR,OTH FOR CAR,OTH
19	61B–8258A–02	EXTENSION, WIRE HARNESS (9.5M) EXTENSION, ARNES DE CABLES(9.5			1			FOR CAR,OTH (10P) FOR CAR,OTH (10P)
20	6K1–8258A–41	EXTENSION, WIRE HARNESS (8M) EXTENSION, ARNES DE CABLES (8M			1			FOR OTH (10P) FOR OTH (10P)

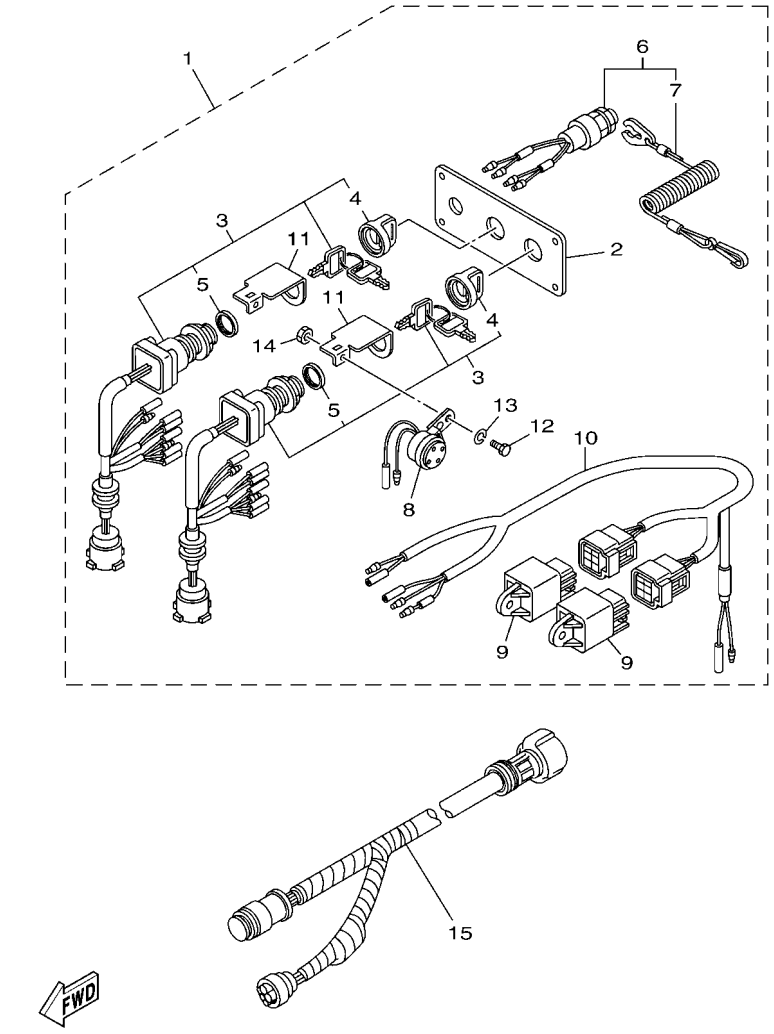

FIG. 54 OPTIONAL PARTS 8 — PARTES OPCIONALES 8

REF. NO.	PART NO. CODIGO Nº	DESCRIPTION DESCRIPCION	6S1M	CAR	6S2M			REMARKS OBSERVACIONES
1	6Y8–82570–05	PANEL SWITCH ASSY INTERRUPTOR DE PANEL COMPL.			1			FOR BRA FOR BRA
2	6Y8–82571–01	.PLATE, PANEL SWITCH .PANEL DE INTERRUPTOR			1			
3	6Y8–82510–03	.MAIN SWITCH ASSY .CONJUNTO DE LLAVE IGNICION			2			
4	676–82577–01	..CAP, KEY ..TAPA			1			
5	703–82532–00	..CAP ..TAPA			1			
6	6K1–82575–01	.ENGINE STOP SWITCH ASSY .INTERRUPTOR DE PARADA COMPL			1			
7	682–82556–00	..LANYARD, STOP SWITCH ..CORDON DE INTERRUPTOR PARADA			1			
8	6R5–83383–00	.BUZZER .ZUMBADOR			2			
9	68V–81950–00	.RELAY ASSY .RELE COMPLETO			2			
10	6Y8–82507–00	.LEAD, IGNITION SWITCH RELAY .CABLE CONDUCTOR			1			
11	64D–82581–00	.STAY, CORD CLAMP .SOPORTE DE GRAMPA DE CABLE			2			
12	97003–05012	.BOLT .PERNO			2			
13	92903–05100	.WASHER, SPRING .RONDANA SENCILLA			2			
14	95303–05700	.NUT .TUERCA			2			
15	61B–8258A–02	EXTENSION, WIRE HARNESS (9.5M) EXTENSION, ARNES DE CABLES(9.5			2			FOR BRA (10P) FOR BRA (10P)

FIG. 55 OPTIONAL PARTS 9 — PARTES OPCIONALES 9

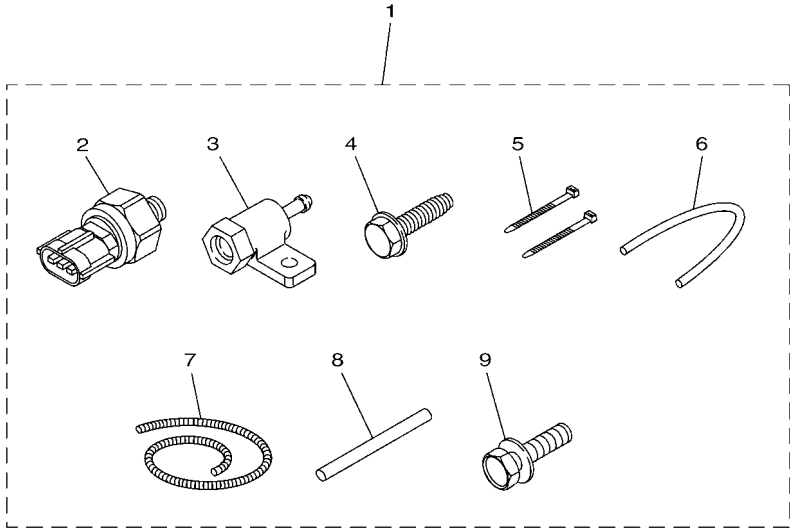

6CE6300-P430

REF. NO.	PART NO. CODIGO Nº	DESCRIPTION DESCRIPCION	6S1M	CAR	6S2M			REMARKS OBSERVACIONES
1	60V–8A4L1–1C	SENSOR, MODULE 1 SENSOR COMP. 1	1	1				EXCEPT NME,CHN,OTH EXCEPT NME,CHN,OTH
2	6AW–8366B–10	.SENSOR, WATER PRESSURE .SENSOR DE PRESION AGUA	1	1				
3	60V–8366D–00	.ADAPTOR, INPUT .CONECTOR BANJO 3	1	1				
4	90109–06M81	.BOLT .PERNO	1	1				
5	90465–11M10	.CLAMP .BRIDA	2	2				
6	90445–07017	.HOSE (L: 550MM) .TUBO (L: 550MM)	1	1				
7	90447–07013	.HOSE, COVER (L: 700MM) .MANGUERA DE CUBIERTA (L:700MM)	1	1				
8	60V–42629–01	.SEAL .SELLO 2	1	1				
9	97E95–06516	.BOLT, HEXAGON W/W DEEP RECESS .TORNILLO HEXAGONAL CON RONDONA	1	1				

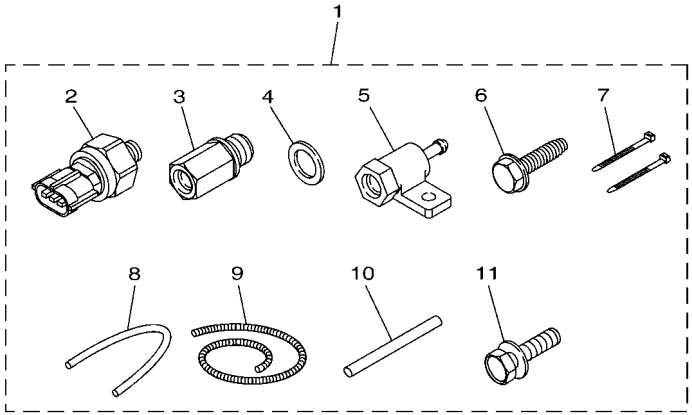

6CL6370-P440

FIG. 56 OPTIONAL PARTS 10 — PARTES OPCIONALES 10

REF. NO.	PART NO. CODIGO Nº	DESCRIPTION DESCRIPCION	6S1M	CAR	6S2M			REMARKS OBSERVACIONES
1	63P–8A4L2–07	SENSOR, MODULE 2 SENSOR COMP. 2	1					FOR OTH FOR OTH
2	6AW–8366B–10	.SENSOR, WATER PRESSURE .SENSOR DE PRESION AGUA	2					
3	63P–8366C–00	.ADAPTOR, INPUT .CONECTOR BANJO 2	1					
4	90430–14115	.GASKET .JUNTA	1					
5	60V–8366D–00	.ADAPTOR, INPUT .CONECTOR BANJO 3	1					
6	90109–06M81	.BOLT .PERNO	1					
7	90465–11M10	.CLAMP .BRIDA	2					
8	90445–07017	.HOSE (L: 550MM) .TUBO (L: 550MM)	1					
9	90447–07013	.HOSE, COVER (L: 700MM) .MANGUERA DE CUBIERTA (L:700MM)	1					
10	60V–42629–01	.SEAL .SELLO 2	1					
11	97E95–06516	.BOLT, HEXAGON W/W DEEP RECESS .TORNILLO HEXAGONAL CON RONDONA	1					

FIG. 57 OPTIONAL PARTS 11 — PARTES OPCIONALES 11

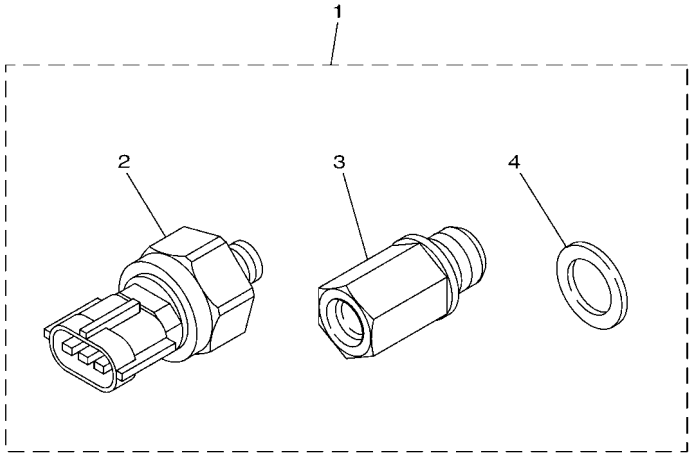

6P2B300-N410

REF. NO.	PART NO. CODIGO Nº	DESCRIPTION DESCRIPCION	6S1M	CAR	6S2M			REMARKS OBSERVACIONES
1	63P–8A4L0–12	SENSOR, MODULE SENSOR COMP.			1			FOR OTH FOR OTH
2	6AW–8366B–10	.SENSOR, WATER PRESSURE .SENSOR DE PRESION AGUA			1			
3	63P–8366C–00	.ADAPTOR, INPUT .CONECTOR BANJO 2			1			
4	90430–14115	.GASKET .JUNTA			1			

FIG. 58 OPTIONAL PARTS 12 — PARTES OPCIONALES 12

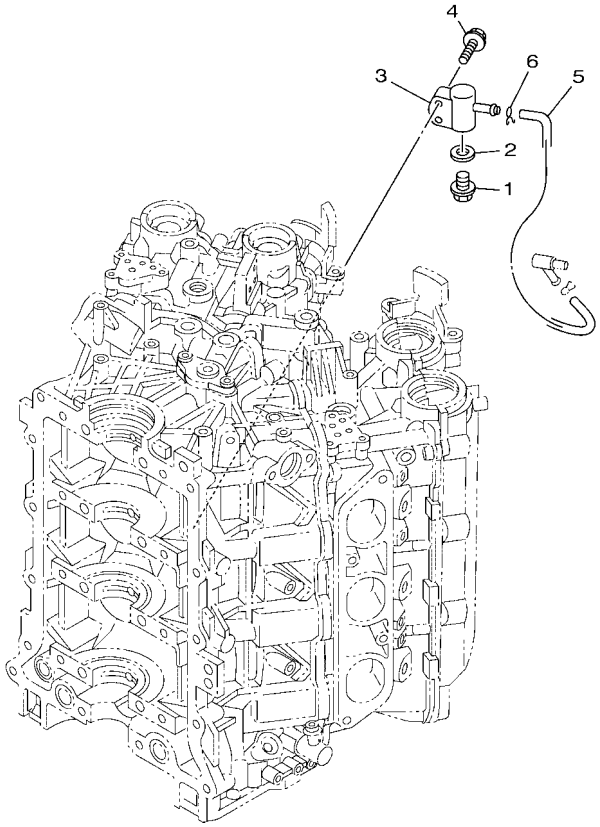

6ALB100-P340

REF. NO.	PART NO. CODIGO Nº	DESCRIPTION DESCRIPCION	6S1M	CAR	6S2M			REMARKS OBSERVACIONES
1	90340–14M06	PLUG, STRAIGHT SCREW TORNILLO, DE DRENAJE	1	1	1			
2	90430–14115	GASKET JUNTA	1	1	1			
3	6P2–83652–00	CONNECTOR CONECTOR	1	1	1			
4	97E95–06530	BOLT, HEXAGON W/W DEEP RECESS TORNILLO HEXAGONAL CON RONDONA	2	2	2			
5	6H4–24311–00	PIPE, FUEL 1 TUBO DE COMBUSTIBLE 1	1	1	1			
6	90467–08M18	CLIP PRESILLA	1	1	1			

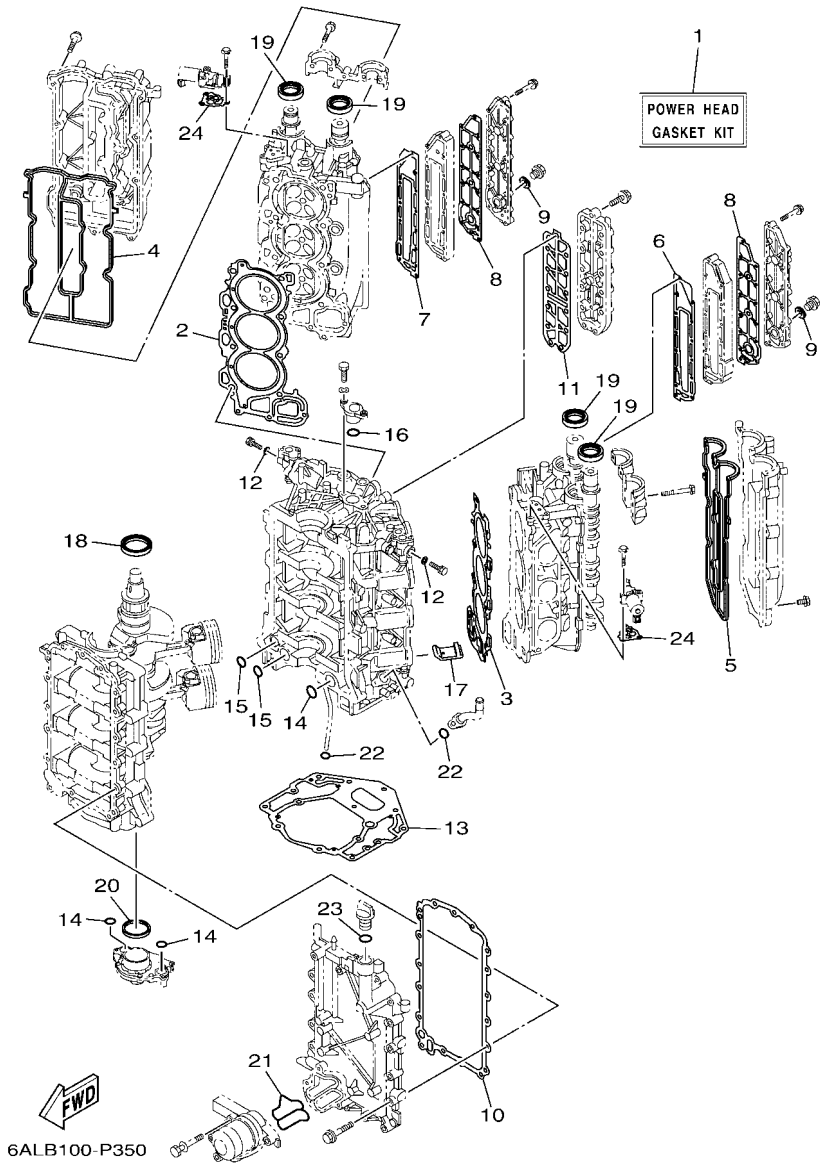

FIG. 59 REPAIR KIT 1 — ESTUCHE REPARATION 1

REF. NO.	PART NO. CODIGO Nº	DESCRIPTION DESCRIPCION	6S1M	CAR	6S2M			REMARKS OBSERVACIONES
1	6P2–W0001–04	POWER HEAD GASKET KIT JUEGO DE EMPAQUE DE MOTOR	1	1	1			
2	6P2–11181–00	.GASKET, CYLINDER HEAD 1 .JUNTA, DE CULATA 1	1	1	1			
3	6P2–11182–00	.GASKET, CYLINDER HEAD 2 .EMPAQUE CULATA DE CILINDRO 2	1	1	1			
4	6P2–11193–00	.GASKET, HEAD COVER 1 .EMPAQUE	1	1	1			
5	6P2–11194–00	.GASKET, HEAD COVER 2 .EMPAQUE DE TAPA DE CULATA 2	1	1	1			
6	6P2–41112–00	.GASKET, EXHAUST INNER COVER .EMPAQUE	1	1	1			
7	6P2–41122–00	.GASKET, EXHAUST INNER COVER .EMPAQUE	1	1	1			
8	6P2–41114–00	.GASKET, EXHAUST OUTER COVER .EMPAQUE	2	2	2			
9	90201–186F1	.WASHER, PLATE .ARANDELA PLANA	2	2	2			
10	69J–15451–01	.GASKET, CRANKCASE COVER 1 .EMPAQ DE CUBIERTA DE CARTER	1	1	1			
11	6P2–1131B–00	.GASKET, COVER .EMPAQUE DE CUBIERTA	1	1	1			
12	90430–05002	.GASKET .JUNTA	2	2	2			
13	69J–11351–12	.GASKET, CYLINDER .JUNTA, DE CILINDRO	1	1	1			
14	93210–25552	.O-RING .ANILLO O	3	3	3			
15	93210–19MJ1	.O-RING .ANILLO O	2	2	2			
16	93210–25647	.O-RING .ANILLO O	1	1	1			
17	69J–14664–01	.GROMMET, WATER SHUT .TAPON	2	2	2			
18	93102–63004	.OIL SEAL .SELLO ACEITE	1	1	1			
19	93102–38008	.OIL SEAL .SELLO ACEITE	4	4	4			
20	69J–11355–00	.SEAL, CYLINDER 1 .RETEN ACEITE CILINDRO 1	1	1	1			
21	6P2–13477–00	.GASKET .EMPAQUE	1	1	1			
22	93210–19MJ3	.O-RING .ANILLO O	2	2	2			
23	93210–24M79	.O-RING .ANILLO O	1	1	1			
24	6CB–1242F–00	.GASKET, FILTER .EMPAQUE DE FILTRO	2	2	2			

FIG. 60 REPAIR KIT 2 — ESTUCHE REPARATION 2

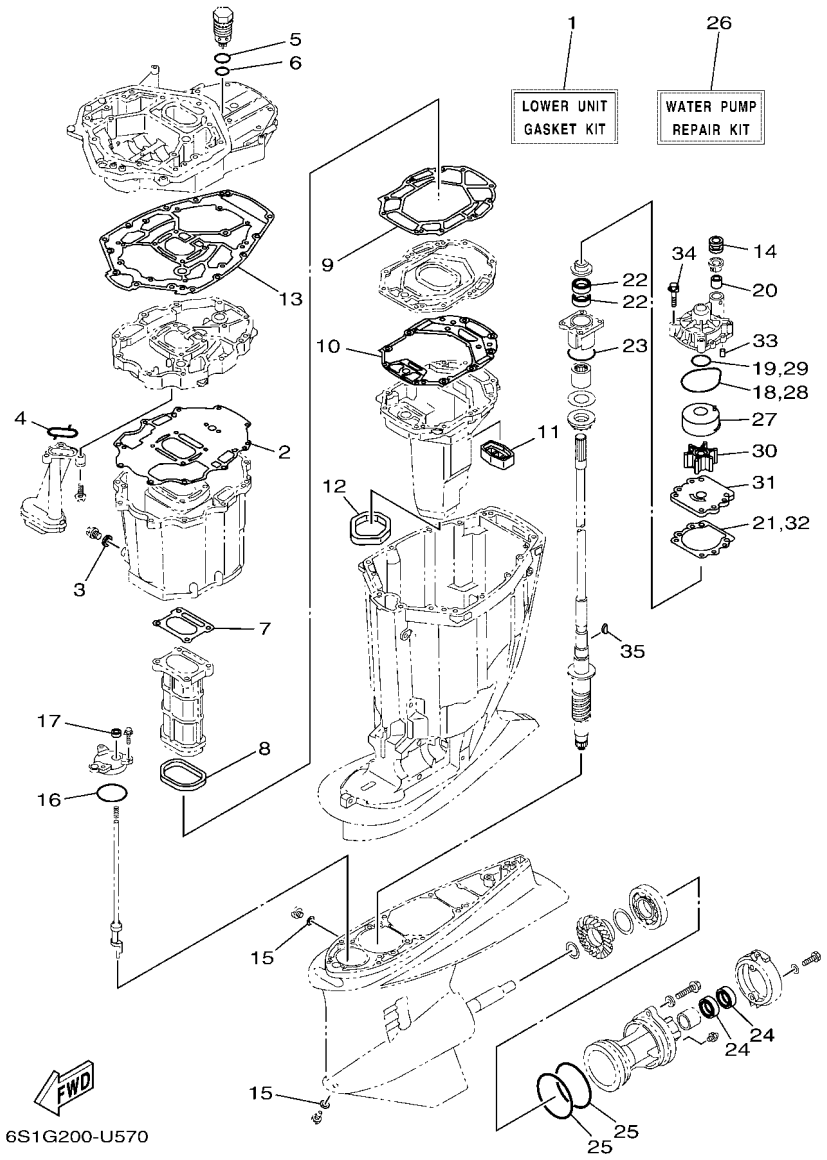

REF. NO.	PART NO. CODIGO Nº	DESCRIPTION DESCRIPCION	6S1M	CAR	6S2M			REMARKS OBSERVACIONES
1	6P2–W0001–24	LOWER UNIT GASKET KIT JUEGO DE EMPAQUE UNIDAD INFER.	1	1	1			
2	69J–15312–02	.GASKET, OIL PAN .EMPAQ BANDEJA DE ACEITE	1	1	1			
3	90430–14M09	.GASKET .JUNTA	1	1	1			
4	69J–13415–00	.SEAL, OIL STRAINER .SELLO COLADOR ACEITE	1	1	1			
5	93210–347A1	.O-RING .ANILLO O	1	1	1			
6	93210–28543	.O-RING .ANILLO O	1	1	1			
7	6P2–41134–00	.GASKET, EXHAUST MANIFOLD .EMPAQUE	1	1	1			
8	69J–41138–00	.SEAL, EXT. 1 .SELLO, ESCAPE 1	1	1	1			
9	69J–41135–A0	.GASKET, EXHAUST MANIFOLD .EMPAQUE	1	1	1			
10	6S1–41136–01	.GASKET, EXHAUST MANIFOLD 4 .EMPAQUE	1	1	1			
11	69J–45127–01	.SEAL .SELLO DE GOMA	1	1	1			
12	69J–45123–00	.GASKET, MUFFLER .EMPAQUE SILENCIADOR	1	1	1			
13	69J–45113–21	.GASKET, UPPER CASING .EMPAQUE	1	1	1			
14	6E5–44366–01	.DAMPER, WATER SEAL 2 .GOMA DEL SELLO DE AGUA 2	1	1	1			
15	90430–08003	.GASKET .JUNTA	2	2	2			
16	93210–64488	.O-RING .ANILLO O	1	1	1			
17	93106–09014	.OIL SEAL .SELLO ACEITE	1	1	1			
18	93210–86M38	.O-RING .ANILLO O	1	1	1			
19	93210–37160	.O-RING .ANILLO O	1	1	1			
20	6E5–44365–01	.DAMPER, WATER SEAL 1 .HULE DE SELLO DE AGUA 1	1	1	1			
21	6E5–44315–A0	.GASKET, WATER PUMP .EMPAQUE	1	1	1			
22	93101–28019	.OIL SEAL .SELLO ACEITE	2	2	2			
23	93210–55M14	.O-RING .ANILLO O	1	1	1			
24	93101–30030	.OIL SEAL .SELLO ACEITE	2	2	2			
25	93211–04384	.O-RING .ANILLO O	2	2	2			
26	6S1–W0078–01	WATER PUMP REPAIR KIT ESTUCHE REPARACION BOMBA AGUA	1	1	1			
27	6R3–44322–42	.INSERT, CARTRIDGE .CARTUCHO	1	1	1			

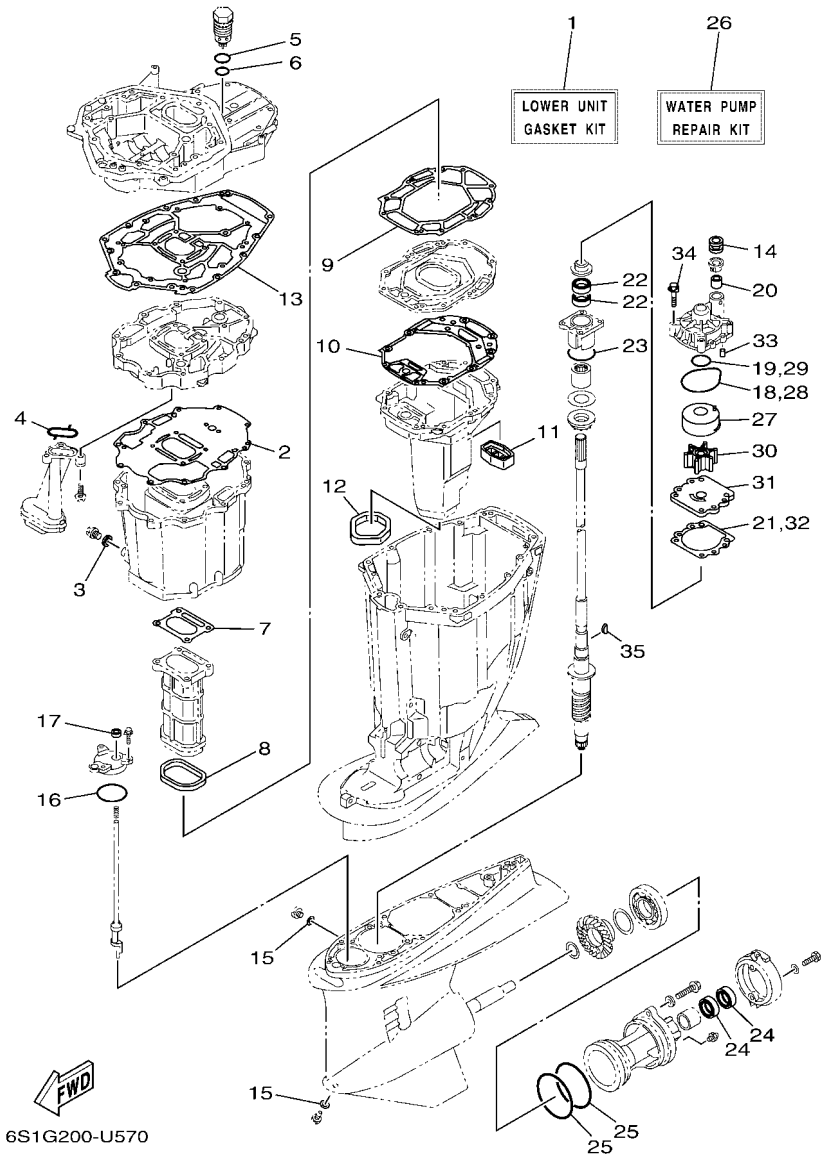

FIG. 60 REPAIR KIT 2 — ESTUCHE REPARATION 2

REF. NO.	PART NO. CODIGO Nº	DESCRIPTION DESCRIPCION	6S1M	CAR	6S2M			REMARKS OBSERVACIONES
28	93210–86M38	.O-RING .ANILLO O	1	1	1			
29	93210–37160	.O-RING .ANILLO O	1	1	1			
30	6E5–44352–01	.IMPELLER .IMPULSOR	1	1	1			
31	6G5–44323–41	.OUTER PLATE, CARTRIDGE .PLACA EXTERIOR DEL CARTUCHO	1	1	1			
32	6E5–44315–A0	.GASKET, WATER PUMP .EMPAQUE	1	1	1			
33	93606–12019	.PIN, DOWEL .PASADOR DE CLAVIJA	2	2	2			
34	90119–08191	.BOLT, WITH WASHER .TORNILLO CON ARANDELA	4	4	4			
35	90280–04M05	.KEY, WOODRUFF .CUNA WOODRUFF	1	1	1			

NUMERICAL INDEX
INDICE NUMERICO

PART NO. CODIGO Nº	REF. NO.
6DX–11000–06	3 – 1
6P2–11110–12–9S	5 – 2
69J–11119–00	3 – 13
6P2–11119–00	6 – 16
6P2–1111E–00	6 – 17
6P2–11120–12–9S	5 – 10
6S5–11133–10	5 – 3
	5 – 11
6P2–11135–00	5 – 34
6P2–11181–00	5 – 22
	59 – 2
6P2–11182–00	5 – 27
	59 – 3
6P2–11191–00–9S	5 – 33
6P2–11192–00–9S	5 – 40
6P2–11193–00	5 – 36
	59 – 4
6P2–11194–00	5 – 41
	59 – 5
69J–11301–02	5 – 16
69J–11313–00	3 – 40
6P2–1131B–00	3 – 18
	59 – 11
6P2–1131C–00–9S	3 – 15
6E5–11325–00	1 – 1
	1 – 8
	1 – 15
	3 – 16
	6 – 9
	20 – 10
6ML–11325–00	1 – 5
	5 – 17
6P2–11325–00	1 – 7
	6 – 8
6P3–11325–00	1 – 3
	3 – 24
	3 – 61
67F–11328–01	5 – 18
69J–11351–12	3 – 37
	59 – 13
69J–11355–00	31 – 16
	59 – 20
6AW–11371–10	30 – 7
676–11372–00	5 – 5
6P2–11372–00	8 – 25
6P2–11377–00	8 – 28
6P2–11410–10	4 – 1
6P2–11416–00	4 – 4

PART NO. CODIGO Nº	REF. NO.
6P2–11416–10	4 – 4
6P2–11416–20	4 – 4
6P2–11417–00	4 – 5
6P2–11417–10	4 – 5
6P2–11417–20	4 – 5
6AW–11426–01	4 – 6
6AW–11427–01	4 – 7
6CB–11478–00	4 – 2
6FA–11567–00	7 – 17
6P2–11590–05	7 – 25
6S1–11603–00	4 – 12
	4 – 14
6S1–11604–00	4 – 12
	4 – 14
6DX–11631–01–93	4 – 11
63P–11633–10	4 – 15
63P–11634–00	4 – 16
6DX–11635–00	4 – 11
6DX–11642–01–93	4 – 13
6DX–11645–00	4 – 13
6P2–11650–00	4 – 8
63P–11654–10	4 – 9
6S1–11656–00	4 – 10
6S1–11656–10	4 – 10
6S1–11656–20	4 – 10
6P2–12111–10	7 – 1
6CB–12113–00	7 – 4
51Y–12119–00	7 – 7
6DX–12121–00	7 – 2
6P2–12171–11	7 – 9
6P2–12172–11	7 – 13
6P2–12181–11	7 – 11
6P2–12182–11	7 – 15
69J–12233–00	30 – 10
6P2–1240H–00–9S	3 – 22
6P3–1240H–00–9S	3 – 59
67F–12411–01	1 – 2
	3 – 20
67F–12412–00	3 – 21
6CB–1242F–00	6 – 20
	59 – 24
6P2–1243A–00	3 – 28
6P2–1243E–00	3 – 29
6P2–1243F–00	3 – 30
6P2–12481–12	9 – 34
6P2–12482–00	9 – 6
6P2–12483–00	9 – 8
6P2–12484–01	9 – 2

PART NO. CODIGO Nº	REF. NO.
6P2–12485–00	9 – 16
6P2–1248A–00	9 – 17
6P2–1248E–00	9 – 18
6P2–12491–00	20 – 8
6DR–12572–00	24 – 13
6R3–12581–00	24 – 14
6R3–12582–00	24 – 15
6R3–12583–00	24 – 16
6P2–12615–00	7 – 22
6P2–12623–00	7 – 19
6P2–12645–22	7 – 18
6P2–12663–00	7 – 20
6S5–12858–00	3 – 45
6CB–13016–00	1 – 10
	13 – 5
6AW–13119–00	31 – 14
6KA–13132–00	13 – 26
6P2–13160–11	12 – 1
6P2–13161–00	12 – 2
6P2–13170–11	12 – 6
6P2–13171–00	12 – 7
6P2–13300–00	31 – 12
69J–13329–01	31 – 13
69J–13411–01	31 – 8
69J–13415–00	31 – 10
	60 – 4
60L–13437–63	17 – 20
69J–13440–05	1 – 4
	3 – 44
6P2–13446–00–9S	3 – 46
67F–13448–00	2 – 13
6P2–13448–00	5 – 45
6P2–13477–00	3 – 47
	59 – 21
6P2–13532–10	11 – 3
6P2–13533–00	11 – 2
6P2–13545–00	11 – 7
6P2–13546–00	11 – 10
6P2–13547–00	11 – 18
6P2–13548–10	11 – 19
6P2–13556–00	10 – 4
6P2–13557–00	10 – 5
6P2–13564–00	8 – 3
6P2–13573–00	10 – 11
6P2–13574–00	10 – 21
6P2–13577–00	12 – 5
	12 – 10
68V–13577–01	14 – 7

PART NO. CODIGO Nº	REF. NO.
68V–13577–01	14 – 14
6P2–13578–00	10 – 8
6P2–13588–01	10 – 7
6CB–13593–00	13 – 23
6P2–13594–00	8 – 4
6P2–13595–00	11 – 4
69J–13631–00	31 – 15
6P2–13641–00	8 – 13
6P2–13642–00	8 – 16
6P2–13645–00	8 – 14
	8 – 17
6P2–13646–00	8 – 15
6P2–13647–00	8 – 18
6P2–13711–00	10 – 3
63P–13716–00	13 – 22
6P2–13750–15	10 – 1
6P2–13751–05	10 – 2
6P2–13758–00	11 – 14
6P2–13761–11	12 – 3
	12 – 8
6AW–13781–00	13 – 30
6AW–13784–00	13 – 33
6CB–13906–01	13 – 8
6P2–13907–22	13 – 24
6P2–13907–32	13 – 24
63P–13915–00	1 – 11
	13 – 25
6P2–13973–30	14 – 10
6P2–13974–30	14 – 11
6C5–1410B–00	12 – 4
	12 – 9
6CB–14146–00	13 – 10
6P2–14149–00	14 – 2
6P2–14159–00	10 – 13
69J–14164–00	10 – 22
6P2–14180–57	13 – 1
6P2–14180–67	13 – 1
6AW–14181–11	13 – 15
6AW–14182–11	13 – 2
6AW–14182–21	13 – 2
6P2–14191–00	13 – 16
68V–14216–00	13 – 12
6CB–14216–00	13 – 6
6CB–14239–00	13 – 17
6P2–14255–00	10 – 12
6P2–14349–00	11 – 1
68V–14356–00	10 – 24
6P2–14360–00	10 – 6

PART NO. CODIGO Nº	REF. NO.
6P2–14386–00	13 – 37
6P2–1441J–01	8 – 22
6CB–14429–01	13 – 19
63P–14435–00	8 – 32
6P2–14440–00	8 – 21
6LH–1447B–00	13 – 29
6P2–14496–00	10 – 9
6CB–14546–00	13 – 28
6CB–14564–00	13 – 9
63P–14567–00	13 – 21
68V–14592–10	13 – 35
69J–14624–01	30 – 45
69J–14664–01	3 – 43
	59 – 17
69J–14711–00–9S	30 – 22
2D1–14737–01	20 – 3
6P2–14752–00	9 – 19
6P2–1475A–10	11 – 5
6P2–1475E–00	11 – 6
6P2–1475F–00	11 – 8
6P2–1475G–00	11 – 9
68V–1475H–00	13 – 13
68V–1475J–00	13 – 14
6CB–14984–00	1 – 12
	13 – 39
6CB–14985–00	13 – 27
6P2–15100–11	3 – 2
6P2–15142–00	5 – 38
6P2–15143–00	5 – 43
6P2–15187–00	3 – 5
69J–15311–10–CA	31 – 1
69J–15312–02	30 – 47
	60 – 2
69J–15316–01	30 – 32
6P2–15362–10	31 – 19
6G8–15363–00	3 – 49
6P2–15373–02	8 – 19
6P2–15377–10	31 – 20
6P2–15411–01–9S	3 – 8
69J–15451–01	3 – 9
	59 – 10
6P2–15481–00	3 – 6
6P2–15512–00	7 – 26
69J–15761–00	31 – 2
6P2–2134X–00	10 – 14
6E5–21744–00	9 – 7
	11 – 16
6YM–22480–00	47 – 2

PART NO. CODIGO Nº	REF. NO.
6P2–24135–00	11 – 12
6P2–24136–00	11 – 13
6P2–24137–00	11 – 15
6P2–2416A–00	11 – 11
6P2–24170–00	10 – 19
6P2–2419A–00	10 – 15
6CB–24217–00	13 – 7
6CB–24217–10	13 – 7
6P2–24300–01	14 – 13
6AW–24300–11	14 – 12
6Y2–24305–06	16 – 11
6Y2–24306–46	16 – 6
6Y2–24307–52	16 – 1
6H4–24311–00	58 – 5
6P2–24313–50	15 – 17
6P2–24314–00	15 – 2
61A–24316–00	9 – 20
6AW–24317–20	14 – 5
6AW–24323–20	14 – 3
6AW–24324–30	14 – 4
6E5–24351–51	16 – 3
	16 – 8
6Y2–24360–60	16 – 5
	16 – 10
6P2–24376–00	11 – 20
6CE–24376–01	9 – 3
6R3–24377–10	15 – 4
688–24378–00	9 – 21
	9 – 22
	9 – 23
	9 – 24
	9 – 25
	11 – 17
69J–24378–00	2 – 14
6E5–24378–00	14 – 8
6S1–24378–00	3 – 31
6E5–24379–00	24 – 10
68V–24379–10	13 – 11
6GR–24410–02	13 – 31
6P2–24419–00	8 – 8
6P2–24422–10	8 – 6
6CB–24452–10	13 – 18
4SV–24453–00	13 – 34
69J–24453–00	13 – 34
6CB–24460–00	13 – 4
6CB–24460–10	13 – 4
6P3–24469–00	15 – 9
6CB–24482–00	13 – 20

NUMERICAL INDEX
INDICE NUMERICO

PART NO. CODIGO Nº	REF. NO.
6AW–24491–10	13 – 32
6CB–24492–00	13 – 36
6CB–24501–01	1 – 9
	13 – 3
6P3–24519–00	15 – 10
6P3–24560–04	15 – 6
6P3–24562–03	15 – 8
6P3–24563–02	1 – 13
	15 – 7
6P3–24564–00	1 – 14
	15 – 11
6P2–24566–11	15 – 12
6CB–24592–00	13 – 38
68V–2481H–00	10 – 25
69J–28100–03	15 – 24
67F–28100–12	15 – 24
6CB–2812A–00	20 – 36
69J–41111–01–9S	6 – 1
6P2–41112–00	6 – 5
	59 – 6
69J–41113–02–9S	6 – 3
6P2–41114–00	6 – 7
	59 – 8
69J–41121–01–9S	6 – 2
6P2–41122–00	6 – 6
	59 – 7
69J–41123–02–9S	6 – 4
69J–41131–11–CA	30 – 13
69J–41132–20–9S	30 – 15
6P2–41134–00	30 – 16
	60 – 7
69J–41135–A0	30 – 19
	60 – 9
6S1–41136–01	30 – 21
	60 – 10
69J–41137–10–CA	30 – 1
69J–41138–00	30 – 18
	60 – 8
6CB–41273–00	25 – 39
69J–42510–00–8D	27 – 5
6S1–42610–12	2 – 1
6P2–42615–00	23 – 8
6P2–4261A–02	2 – 2
60V–42629–01	55 – 8
	56 – 10
68F–42647–01	2 – 3
69J–42647–01	2 – 4
68F–42648–01	2 – 11

PART NO. CODIGO Nº	REF. NO.
60V–42651–01	2 – 8
60V–42652–00	2 – 12
68F–42663–01	2 – 10
69J–42663–01	2 – 5
6S1–42675–01	2 – 19
6S1–42676–01	2 – 20
6S1–42677–01	2 – 21
6S1–42678–01	2 – 18
6S1–4267A–01	2 – 23
6S1–42681–01	2 – 22
6P2–42710–00–8D	23 – 1
648–42715–00	25 – 27
69J–42716–01	23 – 9
61A–42717–00	23 – 18
6P2–42717–00	23 – 3
69J–42717–01	23 – 17
6P2–42718–00	23 – 4
6P2–42722–00	23 – 28
69J–42723–01	21 – 20
6E5–42724–01	30 – 6
6P2–42725–02	23 – 7
6H1–42726–22	23 – 13
61A–42727–01	23 – 15
6P2–42738–00–8D	23 – 2
69J–42741–00–8D	24 – 1
6P2–42743–00	23 – 48
6H4–42748–01	23 – 6
68F–42753–00	23 – 55
6P2–42761–00	3 – 34
67F–42761–01	3 – 33
6P2–42766–20	23 – 50
69J–42769–01	30 – 28
69J–42771–00–8D	24 – 3
69J–42774–10	24 – 7
6EE–42794–41	23 – 59
6EE–42794–51	23 – 60
6EE–42794–71	23 – 59
69J–42815–00–8D	23 – 30
69J–42816–00–8D	23 – 39
69J–42817–00–8D	23 – 31
63P–42818–01	23 – 34
68V–42818–01	23 – 42
6P2–42828–00–9S	23 – 27
69J–42828–02–9S	23 – 26
68F–42828–11–9S	23 – 37
69J–43111–03–8D	26 – 1
69J–43112–03–8D	26 – 11
6E5–43126–10	26 – 38

PART NO. CODIGO Nº	REF. NO.
6R3–43131–00	26 – 17
61A–43132–01	26 – 9
61A–43133–01	26 – 12
64D–43144–00	23 – 45
6G5–43144–00	26 – 28
6E5–43145–01	36 – 8
6G5–43148–00	26 – 33
61A–43181–01	26 – 30
6G5–43185–02	26 – 31
61A–43311–22–8D	26 – 25
6AW–43376–00	27 – 3
69J–43800–14–8D	28 – 1
69J–43801–01	28 – 4
6KA–43804–01	29 – 3
6ML–43805–00	29 – 2
6KA–43806–00	29 – 5
6CE–4380P–00	28 – 12
6CE–43810–01	28 – 3
61A–43811–00	28 – 9
63P–43812–20	28 – 76
61A–43813–02	28 – 18
6H1–43814–11	28 – 17
69J–43816–00	28 – 62
69J–43817–00	28 – 67
61A–43818–00	28 – 25
69J–4381C–00	28 – 30
	28 – 35
69J–4381J–00	28 – 63
69J–43820–01	28 – 78
61A–43821–02	28 – 77
69J–43828–00	28 – 70
6H1–43829–00	28 – 73
69J–4382E–00	28 – 11
69J–43830–01	28 – 33
69J–43831–00	28 – 65
69J–43833–02	28 – 21
69J–43835–10	28 – 19
6CE–43840–01	28 – 2
6CJ–43841–00	28 – 42
6CJ–43843–00	28 – 53
6H1–43844–10	28 – 55
63P–43844–20	28 – 50
69J–43845–00	28 – 28
69A–4384F–00	28 – 39
69J–4384G–00	28 – 58
6H1–4384G–11	28 – 54
69J–4384H–00	28 – 10
61A–4384H–10	28 – 81

PART NO. CODIGO Nº	REF. NO.
6CJ–4384M–00	28 – 38
69J–43851–00	28 – 49
69J–43853–00	28 – 45
69J–43854–00	28 – 57
69J–43855–00	28 – 52
6H1–43856–10	28 – 56
61A–43861–00	28 – 14
	28 – 16
	28 – 74
63P–43861–20	28 – 6
6KA–43862–00	29 – 14
6D8–43863–00	28 – 27
	28 – 75
61A–43864–00	28 – 80
60V–4386A–00	28 – 44
6KA–4386K–00	29 – 6
61A–43871–00	28 – 15
69J–43871–00	28 – 61
6H1–43872–00	28 – 7
61A–43874–00	28 – 79
6H1–43875–00	28 – 29
61A–43875–10	28 – 82
61A–43876–01	28 – 26
6KA–43879–00	29 – 8
6KA–4387G–00	29 – 9
69J–43880–21	29 – 1
69J–43881–20	29 – 10
6KA–43882–00	29 – 13
6H1–43883–00	28 – 43
69J–43888–00	28 – 71
69J–4388E–01	28 – 23
69J–4388F–00	28 – 68
6KA–4388F–00	29 – 12
69J–4388H–00	28 – 66
69J–4388J–00	28 – 20
6KA–43892–00	29 – 4
6CJ–43893–00	28 – 46
69J–43894–00	28 – 41
69J–43899–01	28 – 31
61A–4389H–01	28 – 8
69J–4389J–00	28 – 32
	28 – 36
69J–44117–00	25 – 7
69J–44118–00	25 – 26
69J–44120–02	25 – 32
69J–44120–12	25 – 32
6P2–44121–00	25 – 21
69J–44122–00	25 – 22

PART NO. CODIGO Nº	REF. NO.
6P2–44139–00	25 – 38
69J–44150–00	32 – 15
69K–44150–00	34 – 17
69J–44176–01	25 – 9
703–44189–20	39 – 36
703–44189–30	39 – 43
703–44189–40	39 – 41
6X3–44191–00	39 – 48
	40 – 74
6DA–44194–00	27 – 29
61A–44311–01	32 – 18
	34 – 20
6E5–44312–00	32 – 23
	34 – 25
6E5–44315–A0	32 – 27
	34 – 29
	60 – 21
	60 – 32
6R3–44322–42	32 – 19
	34 – 21
	60 – 27
6G5–44323–41	32 – 26
	34 – 28
	60 – 31
6E5–44352–01	32 – 24
	34 – 26
	60 – 30
6S1–44361–02	33 – 3
	35 – 3
6S1–44361–12	33 – 3
	35 – 3
6D0–44362–01	33 – 15
	35 – 15
6D0–44365–00	33 – 16
	35 – 16
6E5–44365–01	32 – 22
	33 – 1
	34 – 24
	35 – 1
	60 – 20
663–44366–01	32 – 6
	34 – 8
6D0–44366–01	33 – 17
	35 – 17
6E5–44366–01	30 – 49
	33 – 2
	35 – 2
	60 – 14

PART NO. CODIGO Nº	REF. NO.
6D0–44367–00	33 – 14
	35 – 14
6P2–44391–00	23 – 16
61A–44511–01	27 – 32
69J–44514–00	27 – 23
6G5–44526–00	26 – 3
69J–44532–00	27 – 26
69J–44533–00	27 – 31
68F–44533–02	3 – 35
69J–44551–00–8D	27 – 10
61A–44552–01–CA	27 – 21
60X–44555–00	27 – 13
61A–44575–01	27 – 12
69J–45111–10–8D	30 – 27
69J–45113–21	30 – 29
	60 – 13
69J–45123–00	30 – 26
	60 – 12
69J–45127–01	30 – 25
	60 – 11
69J–45151–00–8D	24 – 8
69J–45152–10	30 – 33
61A–45155–01	30 – 37
69J–45159–00	30 – 51
69J–45181–10–9S	30 – 20
69J–45211–02–8D	30 – 48
61A–45214–11	33 – 8
	35 – 8
61A–45215–11	33 – 9
	35 – 9
6G5–45251–02	1 – 16
	26 – 2
6FJ–45300–03–8D	32 – 1
6FK–45300–03–8D	34 – 1
6FJ–45300–12–8D	32 – 1
6FK–45300–13–8D	34 – 1
6DX–45301–00–8D	32 – 2
	34 – 2
69J–45318–01	30 – 35
61A–45321–01	32 – 11
	34 – 13
61A–45331–00–9S	32 – 30
	34 – 32
6DX–45332–00	32 – 60
6DY–45332–00	34 – 62
688–45341–10	32 – 8
	34 – 10
6E5–45344–00	32 – 39

NUMERICAL INDEX
INDICE NUMERICO

PART NO. CODIGO Nº	REF. NO.
6E5–45344–00	34 – 41
6D0–45361–00–8D	32 – 72
	34 – 77
6CE–45373–00	1 – 19
	33 – 12
	35 – 12
6D0–45375–01	33 – 7
	35 – 7
61A–45376–00	32 – 10
	34 – 12
61A–45378–00	30 – 42
61B–45383–00	34 – 68
6DY–45384–00	34 – 69
6P2–45501–01	32 – 41
	34 – 43
6P2–45501–11	32 – 41
	34 – 43
61B–45538–01	34 – 4
6FJ–45551–00	32 – 42
	34 – 44
6FJ–45560–00	32 – 45
6FK–45560–00	34 – 47
61A–45567–00	32 – 5
	34 – 7
61A–45567–10	32 – 5
	34 – 7
61A–45567–20	32 – 5
	34 – 7
61A–45567–30	32 – 5
	34 – 7
61A–45567–40	32 – 5
	34 – 7
61A–45567–50	32 – 5
	34 – 7
61A–45567–60	32 – 5
	34 – 7
6FJ–45571–00	32 – 63
6FK–45571–00	34 – 65
61A–45577–00	32 – 65
69K–45577–00	34 – 70
61A–45577–10	32 – 65
69K–45577–10	34 – 70
61A–45577–20	32 – 65
69K–45577–20	34 – 70
61A–45577–30	32 – 65
69K–45577–30	34 – 70
61A–45577–40	32 – 65
69K–45577–40	34 – 70

PART NO. CODIGO Nº	REF. NO.
61A–45577–50	32 – 65
69K–45577–50	34 – 70
61A–45577–60	32 – 65
69K–45577–60	34 – 70
6P2–45578–00	32 – 64
6K1–45578–01	34 – 67
6K1–45578–10	34 – 67
6P2–45578–10	32 – 64
6K1–45578–20	34 – 67
6P2–45578–20	32 – 64
6K1–45578–30	34 – 67
6P2–45578–30	32 – 64
6K1–45578–40	34 – 67
6P2–45578–40	32 – 64
6K1–45578–50	34 – 67
6K1–45578–60	34 – 67
61A–45587–00	32 – 33
	34 – 35
61A–45587–10	32 – 33
	34 – 35
61A–45587–20	32 – 33
	34 – 35
61A–45587–30	32 – 33
	34 – 35
61A–45587–40	32 – 33
	34 – 35
61A–45587–50	32 – 33
	34 – 35
61A–45587–60	32 – 33
	34 – 35
69J–45611–00	32 – 48
69K–45611–01	34 – 50
69J–45631–00	32 – 52
	34 – 54
61A–45632–00	32 – 51
	34 – 53
61A–45633–00	32 – 53
	34 – 55
61A–45634–01	32 – 50
	34 – 52
61A–45635–00	32 – 55
	34 – 57
61B–45641–01	34 – 51
61A–45641–02	32 – 49
6H1–45668–00	32 – 54
	34 – 56
6G5–45930–00	33 – 23
68F–45930–20	33 – 24

PART NO. CODIGO Nº	REF. NO.
68G–45930–20	35 – 24
6CE–45930–20	33 – 24
6CF–45930–20	35 – 24
6G5–45932–00	33 – 23
68F–45932–20	33 – 24
6CE–45932–20	33 – 24
6CF–45932–20	35 – 24
6CE–45934–20	33 – 24
6CF–45934–20	35 – 24
6CE–45936–20	33 – 24
6CF–45936–20	35 – 24
6CE–45938–20	33 – 24
6CF–45938–20	35 – 24
6G5–45941–00	33 – 23
6G5–45943–01	33 – 23
6K1–45945–00	35 – 23
6G5–45945–01	33 – 23
6K1–45947–00	35 – 23
6G5–45947–01	33 – 23
6G5–45949–00	33 – 23
6G5–45952–00	33 – 23
60H–45970–00	33 – 24
60J–45970–00	35 – 24
6K1–45970–01	35 – 23
6G5–45970–02	33 – 23
68F–45970–20	33 – 24
68G–45970–20	35 – 24
6CE–45970–20	33 – 24
6CF–45970–20	35 – 24
6R4–45970–A1	33 – 23
60H–45972–00	33 – 24
60J–45972–00	35 – 24
61A–45972–00	33 – 23
61B–45972–00	35 – 23
6K1–45972–01	35 – 23
6G5–45972–02	33 – 23
68F–45972–20	33 – 24
68G–45972–20	35 – 24
6CE–45972–20	33 – 24
6CF–45972–20	35 – 24
6R1–45972–A0	35 – 23
6R4–45972–A0	33 – 23
60H–45974–00	33 – 24
60J–45974–00	35 – 24
61A–45974–00	33 – 23
61B–45974–00	35 – 23
6K1–45974–02	35 – 23
6G5–45974–03	33 – 23

PART NO. CODIGO Nº	REF. NO.
68F–45974–20	33 – 24
68G–45974–20	35 – 24
6CE–45974–20	33 – 24
6CF–45974–20	35 – 24
6R1–45974–A0	35 – 23
6R4–45974–A0	33 – 23
60H–45976–00	33 – 24
60J–45976–00	35 – 24
6K1–45976–00	35 – 23
6G5–45976–01	33 – 23
68F–45976–20	33 – 24
68G–45976–20	35 – 24
6CE–45976–20	33 – 24
6CF–45976–20	35 – 24
6R1–45976–A0	35 – 23
6R4–45976–A0	33 – 23
60H–45978–00	33 – 24
60J–45978–00	35 – 24
61A–45978–00	33 – 23
61B–45978–00	35 – 23
6K1–45978–02	35 – 23
6G5–45978–03	33 – 23
68F–45978–20	33 – 24
68G–45978–20	35 – 24
6CE–45978–20	33 – 24
6CF–45978–20	35 – 24
6R1–45978–A0	35 – 23
6R4–45978–A0	33 – 23
69J–45987–00	33 – 18
	35 – 18
688–45997–01	33 – 19
	35 – 19
6CE–45B70–20	33 – 26
6CF–45B70–20	35 – 26
6CE–45B72–20	33 – 26
6CF–45B72–20	35 – 26
6CE–45B74–20	33 – 26
6CF–45B74–20	35 – 26
6CE–45C81–10	33 – 25
	33 – 27
	35 – 25
	35 – 27
6CF–45D70–20	35 – 24
6CE–45D72–20	33 – 24
6CF–45D72–20	35 – 24
6CE–45D74–20	33 – 24
6CF–45D74–20	35 – 24
6P2–46241–02	7 – 24

PART NO. CODIGO Nº	REF. NO.
6X3–48111–00	40 – 59
6X0–48116–00	40 – 73
704–48119–50	41 – 11
704–48119–60	42 – 11
6X0–48121–00	40 – 38
6X0–48127–00	40 – 54
EL8–48127–00	40 – 24
	41 – 24
	42 – 24
6X0–48128–00	40 – 65
704–48128–00	42 – 64
703–48128–10	39 – 39
6X3–48129–00	40 – 68
703–48129–00	39 – 42
	40 – 16
704–48129–11	41 – 2
	42 – 2
704–48129–60	42 – 69
6X0–48138–00	40 – 5
704–48144–10	41 – 53
704–48144–20	42 – 53
703–48152–10	39 – 6
6X0–48153–00	40 – 48
703–48153–00	39 – 62
704–48153–00	41 – 58
	42 – 58
6X0–48155–00	40 – 61
6X0–48156–00	40 – 66
704–48156–00	42 – 65
EL8–48158–00	40 – 31
EL8–48164–00	40 – 39
	41 – 42
	42 – 42
704–48166–00	41 – 59
	42 – 70
704–48167–20	41 – 62
704–48167–30	42 – 72
704–48176–01	41 – 54
704–48176–10	42 – 54
704–48178–00	40 – 35
	42 – 71
704–48178–10	41 – 61
6X0–48187–00	40 – 12
703–48189–00	39 – 19
EL8–48191–00	40 – 20
	41 – 17
	42 – 17
703–48192–00	40 – 45

PART NO. CODIGO Nº	REF. NO.
704–48192–00	41 – 46
	42 – 46
704–48192–P0	41 – 55
	42 – 55
6X0–48193–00	40 – 64
704–48193–00	40 – 43
703–48198–00	39 – 16
703–48205–25	38 – 1
	39 – 1
704–48205–R2	38 – 3
	41 – 1
6X3–48206–11	38 – 2
	40 – 1
703–48207–25	38 – 1
	39 – 1
704–48207–R2	38 – 4
	42 – 1
6X0–48211–00	40 – 26
703–48211–10	39 – 25
EL8–48212–00	40 – 2
703–48212–10	39 – 26
EL8–48213–00	40 – 75
703–48213–10	39 – 27
703–48215–11	39 – 47
704–48215–61	41 – 13
704–48215–70	42 – 13
703–48219–10	39 – 34
704–48219–R0	41 – 52
	42 – 52
6X3–48221–10	40 – 56
703–48221–10	39 – 28
704–48221–R0	41 – 43
	42 – 43
6X3–48222–10	40 – 49
704–48222–10	41 – 33
703–48222–20	39 – 31
704–48222–20	42 – 62
704–48222–30	42 – 33
6X0–48223–00	40 – 55
703–48223–10	39 – 32
704–48224–R0	41 – 49
	42 – 49
6X3–48225–00	40 – 58
6X3–48225–10	40 – 57
703–48225–10	39 – 33
6X3–48225–30	40 – 60
704–48225–R0	41 – 45
	42 – 45

NUMERICAL INDEX
INDICE NUMERICO

PART NO. CODIGO Nº	REF. NO.
703–48227–00	39 – 30
	40 – 50
704–48229–20	42 – 60
704–48229–30	41 – 36
	42 – 36
704–48231–00	41 – 26
	42 – 26
EL8–48231–00	40 – 27
703–48232–00	39 – 2
704–48232–P1	41 – 41
	42 – 41
704–48233–00	41 – 56
	42 – 56
EL8–48233–00	40 – 46
703–48234–00	39 – 20
704–48234–00	41 – 51
	42 – 51
EL8–48234–00	40 – 44
702–48235–00	40 – 47
703–48235–00	39 – 5
704–48235–00	41 – 57
	42 – 57
703–48236–00	39 – 18
703–48238–00	39 – 24
704–48238–00	40 – 37
	41 – 40
	42 – 40
EL8–48241–00	40 – 28
	41 – 27
	42 – 27
704–48242–10	41 – 44
	42 – 44
EL8–48242–10	40 – 40
703–48243–00	39 – 17
703–48244–00	39 – 23
EL8–48244–00	40 – 33
	41 – 31
	42 – 30
703–48245–00	39 – 13
EL8–48245–00	40 – 34
	41 – 32
	42 – 31
701–48246–00	41 – 5
	42 – 5
703–48246–00	39 – 29
701–48248–00	39 – 15
	40 – 36
	41 – 39

PART NO. CODIGO Nº	REF. NO.
701–48248–00	42 – 39
EL8–48251–00	40 – 3
	41 – 3
	42 – 3
703–48252–00	39 – 14
EL8–48254–00	40 – 29
	41 – 28
	42 – 28
EL8–48259–00	40 – 8
	41 – 7
	42 – 7
6X0–48261–00	40 – 19
704–48261–00	41 – 16
	42 – 16
703–48261–01	39 – 4
6X0–48262–00	40 – 10
704–48262–00	41 – 8
	42 – 8
702–48263–00	40 – 41
6X0–48264–00	40 – 11
703–48264–00	39 – 8
704–48264–00	41 – 9
	42 – 9
6X0–48265–00	40 – 9
704–48265–00	41 – 4
	42 – 4
703–48265–10	39 – 11
704–48266–00	40 – 14
703–48268–00	39 – 7
703–48271–00	39 – 3
704–48271–00	41 – 23
	42 – 23
EL8–48271–00	40 – 23
EL8–48279–00	40 – 42
	41 – 50
	42 – 50
6X0–48281–00	40 – 63
703–48281–00	39 – 35
704–48281–00	40 – 71
	41 – 14
	42 – 14
EL8–48281–00	40 – 17
	41 – 12
	42 – 12
704–48283–00	41 – 18
	42 – 18
703–48284–00	39 – 59
703–48284–10	39 – 59

PART NO. CODIGO Nº	REF. NO.
704–48284–P0	41 – 60
	42 – 67
704–48285–20	42 – 68
701–48287–00	39 – 46
	40 – 67
704–48287–00	41 – 21
	42 – 21
6X0–48288–00	40 – 53
703–48293–11	39 – 45
701–48320–70	38 – 5
6E5–48344–00	25 – 5
	25 – 41
703–48345–01	39 – 21
	40 – 22
	41 – 20
	42 – 20
701–48350–50	38 – 5
701–48350–80	38 – 5
703–48358–01	39 – 22
	40 – 25
	41 – 25
	42 – 25
6P2–48531–00	25 – 1
63P–48538–00	25 – 3
6E5–61303–01	37 – 5
6E5–61310–00	37 – 1
6E5–61311–11	37 – 3
6E5–61313–00	37 – 2
6E5–61315–00	37 – 4
6E5–61350–02	36 – 1
6E5–61351–01	36 – 2
6E5–61355–00	36 – 5
6P2–81128–00	17 – 19
6P2–81332–00	17 – 13
6P2–81337–02	17 – 15
6P2–81443–00	17 – 3
6P2–81450–00	17 – 1
6P2–81460–00	17 – 2
6P2–81614–10	20 – 2
6BR–81800–02	22 – 1
69J–81801–11	22 – 5
67F–81807–00	22 – 10
67F–81808–00	22 – 8
67F–81809–00	22 – 19
67F–81810–00	22 – 3
67F–81813–00	22 – 6
67F–81820–00	22 – 7
67F–81821–00	22 – 13

PART NO. CODIGO Nº	REF. NO.
6K7–81826–11	22 – 24
69J–81828–00	22 – 25
67F–81830–00	22 – 17
67F–81832–00	22 – 11
67F–81836–00	22 – 12
6C5–81839–00	22 – 21
67F–8183R–00	22 – 15
60V–8183T–00	22 – 18
6P2–8183X–00	20 – 26
69J–81840–11	22 – 4
67F–81841–00	22 – 14
69J–81842–00	22 – 20
6P2–81845–10	19 – 6
67F–81846–00	22 – 26
67F–81850–00	22 – 2
67F–81857–00	22 – 9
6C5–81869–00	22 – 23
67F–81891–00	22 – 16
6DA–81919–11	20 – 43
6Y8–81920–01	48 – 2
	49 – 4
	50 – 1
	51 – 7
6Y8–81920–11	48 – 4
	49 – 6
	51 – 1
	51 – 9
6P2–81923–00	20 – 44
6P2–81925–01	20 – 13
63P–81941–00	22 – 22
6P2–81948–10	20 – 17
68V–81950–00	53 – 9
	54 – 9
704–81950–11	42 – 59
6P2–81960–12	20 – 1
6P2–81972–00–9S	20 – 5
60V–81975–A0	20 – 4
6FM–81980–01	21 – 3
6EE–81994–41	17 – 21
6EE–81994–51	17 – 22
6EE–81994–70	17 – 23
6AH–81996–01	23 – 61
6P2–82105–03	20 – 48
6P2–82113–00	20 – 37
6Y5–82117–00	44 – 12
6P2–82119–00	20 – 28
69J–82147–00	26 – 27
6E5–82148–00	26 – 7

PART NO. CODIGO Nº	REF. NO.
6H1–82148–00	26 – 5
6E5–82149–00	27 – 16
6CB–82151–00	20 – 31
6G1–82151–01	43 – 5
	43 – 5
	44 – 5
	48 – 9
	49 – 12
6CB–82151–10	20 – 32
6CB–82151–20	20 – 33
6CB–82151–30	20 – 34
6CB–82151–41	20 – 30
6DA–82170–12	20 – 29
6P2–82310–03	18 – 1
6P2–82314–21	19 – 17
6P2–82316–01	19 – 3
6A0–82317–01	19 – 14
	20 – 20
663–82317–02	17 – 16
6P2–82380–00	10 – 10
6P2–82389–10	3 – 54
6Y8–82507–00	53 – 10
	54 – 10
61B–82510–03	46 – 4
6Y8–82510–03	53 – 3
	54 – 3
6R5–82510–04	45 – 4
64D–82510–21	52 – 4
703–82510–45	39 – 49
6Y8–82521–11	48 – 6
	49 – 1
	51 – 3
	51 – 5
6Y8–82521–31	49 – 2
	51 – 6
6Y8–82521–51	48 – 7
	49 – 2
	50 – 5
	51 – 4
703–82531–00	39 – 52
	44 – 13
6K1–82532–00	39 – 51
	52 – 6
703–82532–00	45 – 6
	46 – 6
	53 – 5
	54 – 5
703–82540–00	39 – 56

PART NO. CODIGO Nº	REF. NO.
704–82540–00	40 – 15
704–82540–30	42 – 10
704–82540–40	41 – 10
704–82541–10	40 – 72
6P3–82553–00	21 – 18
6Y8–82553–21	49 – 3
6Y8–82553–31	48 – 5
	49 – 3
6P2–82554–00	23 – 23
682–82556–00	39 – 54
	40 – 70
	45 – 8
	46 – 8
	53 – 7
	54 – 7
6P2–82560–01	3 – 51
69J–82563–01	21 – 17
6X3–82563–02	40 – 52
703–82563–21	39 – 58
703–82563–31	39 – 58
704–82563–60	41 – 35
704–82563–70	42 – 35
704–82563–80	42 – 61
704–82563–90	42 – 66
6Y8–82570–05	53 – 1
	54 – 1
61B–82570–0A	46 – 1
6R5–82570–0A	45 – 1
64D–82570–23	52 – 1
64D–82571–00	52 – 2
6Y8–82571–01	53 – 2
	54 – 2
6K1–82571–02	46 – 2
704–82571–02	45 – 2
6K1–82575–01	46 – 7
	53 – 6
	54 – 6
6X3–82575–01	40 – 69
688–82575–02	39 – 53
	45 – 7
703–82577–00	39 – 50
	52 – 5
676–82577–01	45 – 5
	46 – 5
	53 – 4
	54 – 4
6P2–8257V–00	17 – 4
64D–82581–00	45 – 9

NUMERICAL INDEX
INDICE NUMERICO

PART NO. CODIGO Nº	REF. NO.
64D–82581–00	52 – 7
	53 – 11
	54 – 11
6AW–82582–00	21 – 6
6DA–82582–00	21 – 4
6Y8–82582–01	50 – 3
6DA–82582–10	21 – 5
6Y8–82582–11	21 – 2
	48 – 10
	49 – 7
	50 – 4
69J–82587–01	21 – 21
64D–82588–00	52 – 3
6E5–82588–00	23 – 19
61A–82588–01	25 – 16
61B–82588–01	46 – 3
6P2–82588–01	3 – 53
6R5–82588–01	45 – 3
6P2–82589–10	21 – 9
6P2–8258A–00	10 – 23
61B–8258A–02	46 – 24
	53 – 19
	54 – 15
688–8258A–20	39 – 55
688–8258A–30	21 – 24
6K1–8258A–41	21 – 25
	45 – 18
	46 – 23
	52 – 12
	53 – 20
704–82590–10	42 – 63
6P2–82590–72	21 – 1
703–82591–00	39 – 60
703–82592–00	39 – 61
6P2–82594–00	23 – 57
704–82594–00	41 – 34
	42 – 34
6EM–82599–00	21 – 7
69J–8259F–00	25 – 15
60V–8259F–01	25 – 14
6P2–8259M–10	20 – 42
6R5–83383–00	45 – 13
	46 – 13
	53 – 8
	54 – 8
703–83383–11	39 – 57
688–83383–12	52 – 11
6Y8–83500–24	49 – 9

PART NO. CODIGO Nº	REF. NO.
6Y5–8350F–B4	44 – 7
6Y8–8350T–24	49 – 8
	51 – 2
	51 – 10
6Y5–8350T–E3	43 – 1
	44 – 1
6YM–83512–00	47 – 5
6Y5–83553–01	43 – 4
	44 – 4
6YM–83553–01	48 – 11
6Y8–83553–02	48 – 8
	49 – 11
6Y5–83553–F2	44 – 9
6Y5–83553–M1	43 – 4
6Y5–83557–10	43 – 6
6E5–83558–00	30 – 39
6YD–8356N–00	48 – 1
6Y8–8356N–01	49 – 10
6Y5–83570–A3	43 – 7
6P2–83597–00	3 – 56
6K1–83614–01	46 – 9
69J–83614–10	21 – 22
6AW–83651–01	3 – 55
6P2–83652–00	58 – 3
6Y5–83653–30	43 – 9
6Y5–83653–40	44 – 6
6AW–8366B–10	55 – 2
	56 – 2
	57 – 2
63P–8366C–00	56 – 3
	57 – 3
60V–8366D–00	55 – 3
	56 – 5
69J–8366G–02	23 – 52
69J–83672–12	27 – 1
6YM–83710–18	47 – 1
6YM–83956–00	47 – 3
6YD–83957–00	47 – 4
6Y8–84383–00	43 – 3
	43 – 8
	44 – 3
	44 – 8
6P2–85075–00	18 – 6
	18 – 9
6Y8–85371–01	48 – 3
	49 – 5
	50 – 2
	51 – 8

PART NO. CODIGO Nº	REF. NO.
6CB–85544–10	20 – 35
689–85547–01	15 – 1
6P2–85580–00	17 – 6
6P2–85722–00	21 – 13
6Y5–85752–02	44 – 10
6P2–85780–01	3 – 57
61A–85790–01	18 – 3
61B–85830–03	46 – 14
63P–85886–00	8 – 31
6P2–85896–00	18 – 5
6P2–85897–00	18 – 8
6S1–8591A–43	19 – 1
6S1–8591A–53	19 – 1
6C5–86120–00	10 – 20
6CB–86120–00	6 – 19
6YM–87278–00	47 – 6
6P2–8A410–02	25 – 37
63P–8A4L0–12	57 – 1
60V–8A4L1–1C	55 – 1
63P–8A4L2–07	56 – 1
K0F–A3741–00	7 – 5
K0F–A3742–00	7 – 6
K0F–A3743–00	7 – 3
K0F–A3751–00	7 – 8
K0F–A3751–10	7 – 8
K0F–A3751–20	7 – 8
K0F–A3751–30	7 – 8
K0F–A3751–40	7 – 8
K0F–A3751–50	7 – 8
K0F–A3751–60	7 – 8
K0F–A3751–70	7 – 8
K0F–A3751–80	7 – 8
K0F–A3751–90	7 – 8
K0F–A3751–A0	7 – 8
K0F–A3751–B0	7 – 8
K0F–A3751–C0	7 – 8
K0F–A3751–D0	7 – 8
K0F–A3751–E0	7 – 8
K0F–A3751–F0	7 – 8
K0F–A3751–G0	7 – 8
K0F–A3751–H0	7 – 8
K0F–A3751–J0	7 – 8
K0F–A3751–K0	7 – 8
K0F–A3751–L0	7 – 8
K0F–A3751–M0	7 – 8
K0F–A3751–N0	7 – 8
K0F–A3751–P0	7 – 8
K0F–A3751–R0	7 – 8

PART NO. CODIGO Nº	REF. NO.
K0F–A3751–S0	7 – 8
K0F–A3751–T0	7 – 8
K0F–A3753–00	7 – 8
K0F–A3753–10	7 – 8
K0F–A3753–20	7 – 8
K0F–A3753–30	7 – 8
K0F–A3753–40	7 – 8
K0F–A3753–50	7 – 8
K0F–A3753–60	7 – 8
K0F–A3753–70	7 – 8
6P2–W0001–04	59 – 1
6P2–W0001–24	60 – 1
6S1–W0078–01	1 – 20
	60 – 26
6P2–W009A–07–9S	5 – 1
6P2–W009C–07–9S	5 – 9
63P–W8195–00	20 – 23
90101–09M70	37 – 9
90101–12065	26 – 42
	26 – 42
90101–12066	26 – 42
	26 – 42
90101–14002	27 – 17
90101–14003	27 – 27
90105–05012	3 – 25
	3 – 62
90105–06035	6 – 21
90105–06M07	5 – 19
90105–06M09	3 – 14
	6 – 18
90105–08049	32 – 69
	34 – 74
90105–10M00	33 – 13
	35 – 13
90109–06M80	3 – 23
	3 – 60
90109–06M81	23 – 20
	55 – 4
	56 – 6
90109–06M82	23 – 5
	23 – 29
	23 – 38
	23 – 49
90109–06M86	21 – 23
	23 – 22
	23 – 24
	23 – 46
	23 – 53

PART NO. CODIGO Nº	REF. NO.
90109–06M86	23 – 58
	25 – 2
90109–06MA1	17 – 18
90109–08019	25 – 12
90110–06038	8 – 5
90110–06150	5 – 39
	5 – 44
90111–06142	24 – 5
90111–06144	24 – 4
	24 – 9
90116–10012	30 – 52
90116–10027	3 – 12
90119–06025	3 – 48
90119–06027	6 – 13
90119–06286	32 – 14
	34 – 16
90119–06289	10 – 16
	19 – 16
90119–06294	20 – 22
90119–06296	12 – 11
90119–06297	25 – 40
90119–06299	8 – 10
90119–06309	15 – 13
	30 – 44
90119–06311	8 – 24
90119–06M92	19 – 19
90119–06MA3	20 – 6
90119–06MA4	3 – 19
90119–06MA5	20 – 7
90119–06MA6	8 – 12
90119–07001	5 – 7
90119–07234	5 – 8
	5 – 15
90119–07235	5 – 14
90119–08009	3 – 11
90119–08021	5 – 26
	5 – 31
90119–08182	30 – 2
90119–08187	23 – 10
90119–08191	32 – 29
	34 – 31
	60 – 34
90119–08M66	3 – 7
90119–08M91	5 – 25
	5 – 30
90119–10007	30 – 30
90119–10008	33 – 6
	35 – 6

PART NO. CODIGO Nº	REF. NO.
90119–10009	30 – 55
90119–10024	26 – 24
	27 – 22
	27 – 33
90119–10050	7 – 21
90119–10072	33 – 6
	35 – 6
90119–10M07	7 – 28
90149–05M05	45 – 14
	46 – 19
	53 – 15
90151–06M02	6 – 11
90152–05003	33 – 10
	35 – 10
90155–10009	5 – 24
	5 – 29
90158–06003	44 – 11
90170–09M05	37 – 10
90170–14M06	37 – 6
90170–16M19	32 – 44
	34 – 46
90171–18M04	33 – 21
	35 – 21
90173–06001	24 – 2
90179–08003	22 – 28
90179–24002	17 – 12
90183–02M03	32 – 57
	34 – 59
90185–05002	33 – 11
	35 – 11
90185–09M01	36 – 6
	37 – 11
90185–14M00	27 – 19
	27 – 28
90185–22M11	26 – 20
90201–02M00	32 – 56
	34 – 58
90201–06068	23 – 36
	23 – 44
90201–08023	32 – 70
	34 – 75
90201–09M02	25 – 35
90201–10M01	7 – 29
90201–10M20	36 – 7
90201–10M76	37 – 8
90201–12426	26 – 44
90201–13M01	26 – 43
90201–15M58	27 – 18

NUMERICAL INDEX
INDICE NUMERICO

PART NO. CODIGO Nº	REF. NO.
90201–16015	27 – 24
90201–16016	27 – 15
90201–16M00	32 – 43
	34 – 45
90201–186F1	6 – 15
	59 – 9
90201–24014	17 – 11
90201–26M59	26 – 19
90201–40M00	27 – 6
90201–42014	32 – 36
	34 – 38
90202–08M20	25 – 23
90202–28M46	27 – 25
90202–32M19	27 – 14
90202–40M47	27 – 9
90206–15M18	23 – 33
	23 – 41
90249–06M19	26 – 34
90269–05005	23 – 51
90280–04M05	32 – 25
	34 – 27
	60 – 35
90280–05015	17 – 10
90340–08002	32 – 7
	34 – 9
90340–14M06	31 – 6
	58 – 1
90340–18M09	6 – 14
90344–51019	5 – 4
	5 – 12
90386–06M12	25 – 25
90386–10M16	26 – 32
90386–12069	25 – 11
90386–15M73	23 – 32
	23 – 40
90386–18M14	26 – 40
	28 – 24
90386–18M63	26 – 39
90386–25M31	26 – 18
90386–39M89	27 – 7
90386–90M90	25 – 34
90387–06037	30 – 11
90387–06044	19 – 18
90387–06119	19 – 15
	20 – 21
90387–06263	31 – 9
90387–06289	10 – 18
	15 – 15

PART NO. CODIGO Nº	REF. NO.
90387–06M26	21 – 10
90387–08M37	23 – 12
90387–10M05	26 – 35
90387–10M61	36 – 3
90430–05002	3 – 26
	3 – 63
	59 – 12
90430–06M03	5 – 20
90430–08003	1 – 18
	32 – 9
	34 – 11
	60 – 15
90430–14115	56 – 4
	57 – 4
	58 – 2
90430–14M09	1 – 17
	31 – 7
	60 – 3
90445–07010	30 – 41
90445–07012	30 – 41
90445–07017	55 – 6
	56 – 8
90445–09040	9 – 1
90445–09041	9 – 12
90445–09097	9 – 14
90445–09220	9 – 15
90445–09224	9 – 13
90445–09304	9 – 32
90445–11028	24 – 17
90445–11182	2 – 17
90445–11699	2 – 16
90445–11M27	2 – 15
90445–11M47	24 – 11
90445–13511	15 – 3
90445–13M25	16 – 2
	16 – 7
90445–13M26	16 – 9
90446–10M01	9 – 9
90447–07013	55 – 7
	56 – 9
90447–13009	24 – 12
90462–08026	20 – 39
90462–08032	18 – 10
90462–20001	23 – 21
90464–06001	3 – 52
	17 – 5
90464–08004	19 – 8
90464–09010	25 – 20

PART NO. CODIGO Nº	REF. NO.
90464–09013	9 – 26
90464–09M47	23 – 25
90464–10M57	21 – 19
90464–12009	14 – 17
	15 – 19
	15 – 22
90464–12010	14 – 15
	15 – 20
90464–12012	14 – 1
90464–12183	19 – 12
	19 – 13
90464–13249	19 – 9
90464–14010	21 – 15
90464–18004	11 – 21
	11 – 22
	20 – 12
	23 – 54
	24 – 20
90464–18005	14 – 16
90464–19M45	19 – 4
	21 – 12
90464–20011	8 – 29
90464–20024	15 – 21
90464–20258	23 – 56
90464–21002	9 – 35
90464–23199	19 – 5
	19 – 11
90464–60067	9 – 10
	9 – 33
90464–99004	8 – 23
90465–06M86	25 – 19
90465–08M83	26 – 15
	26 – 22
90465–11M10	3 – 58
	8 – 30
	9 – 4
	9 – 11
	9 – 27
	9 – 28
	9 – 29
	9 – 31
	15 – 5
	15 – 18
	15 – 23
	23 – 14
	24 – 18
	25 – 18
	26 – 21

PART NO. CODIGO Nº	REF. NO.
90465–11M10	30 – 40
	43 – 10
	55 – 5
	56 – 7
90465–11M52	20 – 15
	20 – 18
90465–11M59	3 – 32
90465–13M18	8 – 20
	21 – 16
90465–14M66	19 – 10
	20 – 19
	21 – 8
	21 – 11
90467–08M18	5 – 46
	9 – 30
	9 – 36
	58 – 6
90467–09M03	9 – 5
90467–09M09	9 – 37
90467–140A9	14 – 9
90467–141A2	14 – 6
90468–18008	25 – 6
	25 – 24
	25 – 42
90480–06M19	16 – 4
90480–10M23	10 – 17
90480–12314	17 – 17
90480–14018	15 – 14
90480–14M17	24 – 6
90480–22M81	23 – 11
90501–10M77	32 – 58
	34 – 60
90501–11M10	32 – 17
	34 – 19
90501–12082	25 – 29
90501–450A2	32 – 38
	34 – 40
90506–16003	26 – 37
90506–18M40	23 – 47
90508–20020	25 – 13
90560–12M01	36 – 4
91318–05025	28 – 59
91318–05040	28 – 64
91490–20015	25 – 36
91490–40030	33 – 22
	35 – 22
91690–30010	25 – 4
	25 – 31

PART NO. CODIGO Nº	REF. NO.
91690–30020	26 – 36
91690–40010	6 – 12
91809–08006	5 – 6
	5 – 13
91814–18002	3 – 4
92780–06020	40 – 30
	41 – 29
	42 – 29
92903–05100	45 – 11
	45 – 16
	52 – 9
	53 – 13
	54 – 13
92903–05600	45 – 17
92903–08100	20 – 47
92990–05100	46 – 11
	46 – 21
	53 – 17
92990–05300	40 – 62
	41 – 37
	42 – 37
92990–05600	46 – 22
	53 – 18
92990–06100	2 – 6
	46 – 17
92990–06300	41 – 48
	42 – 48
92990–06600	46 – 18
92990–08600	39 – 38
92990–10600	18 – 4
	40 – 7
92990–18200	33 – 20
	35 – 20
92995–10600	30 – 53
92995–14600	27 – 20
	27 – 30
93101–28019	32 – 31
	34 – 33
	60 – 22
93101–30030	32 – 67
	34 – 72
	60 – 24
93102–38008	7 – 23
	59 – 19
93102–63004	4 – 3
	59 – 18
93106–09014	32 – 13
	34 – 15

PART NO. CODIGO Nº	REF. NO.
93106–09014	60 – 17
93106–19001	28 – 5
93210–064A5	28 – 51
93210–08287	16 – 12
93210–08391	28 – 48
93210–09165	25 – 33
	28 – 72
93210–16275	36 – 9
93210–17239	28 – 22
93210–19MJ1	3 – 39
	59 – 15
93210–19MJ3	8 – 26
	31 – 21
	59 – 22
93210–24M79	3 – 50
	59 – 23
93210–25552	3 – 38
	31 – 18
	59 – 14
93210–25647	3 – 41
	59 – 16
93210–28543	30 – 9
	60 – 6
93210–347A1	30 – 8
	60 – 5
93210–35321	27 – 8
93210–37160	32 – 21
	34 – 23
	60 – 19
	60 – 29
93210–55M14	32 – 37
	34 – 39
	60 – 23
93210–64488	32 – 12
	34 – 14
	60 – 16
93210–66001	28 – 69
93210–86M38	32 – 20
	34 – 22
	60 – 18
	60 – 28
93211–04384	32 – 68
	34 – 73
	60 – 25
93306–210U0	32 – 62
93311–83280	32 – 3
	34 – 3
93315–43064	32 – 66

NUMERICAL INDEX
INDICE NUMERICO

PART NO. CODIGO Nº	REF. NO.
93315–43064	34 – 71
93315–660W3	34 – 5
93317–330U2	32 – 32
	34 – 34
93317–62891	32 – 46
	34 – 48
93332–00048	34 – 64
93332–000W1	32 – 4
93341–34019	32 – 35
	34 – 37
93341–440U5	34 – 66
93341–670V0	34 – 6
93341–93020	32 – 34
	34 – 36
93410–18M05	26 – 41
93410–36102	27 – 11
93420–36M01	30 – 36
93430–06024	39 – 12
	40 – 6
	41 – 6
	42 – 6
93450–37097	32 – 47
	34 – 49
93501–04011	32 – 59
	34 – 61
93501–04M02	25 – 28
93501–08001	28 – 47
93503–16003	28 – 37
93505–32038	28 – 13
	28 – 34
93604–35236	28 – 60
93605–10108	7 – 10
	7 – 12
	7 – 14
	7 – 16
93606–12019	3 – 3
	3 – 10
	30 – 43
	32 – 28
	34 – 30
	60 – 33
93606–19M23	30 – 24
93608–12M05	30 – 50
	33 – 4
	35 – 4
93608–16M16	30 – 5
	30 – 14
	30 – 31

PART NO. CODIGO Nº	REF. NO.
93608–16M16	31 – 5
93700–06002	26 – 14
	26 – 26
93700–06M01	25 – 10
93700–09M00	32 – 71
	34 – 76
94702–00400	1 – 6
	5 – 47
95303–05600	45 – 15
95303–05700	45 – 12
	52 – 10
	53 – 14
	54 – 14
95333–08600	20 – 46
95380–05600	39 – 9
	41 – 22
	42 – 22
	46 – 12
	46 – 20
	53 – 16
95380–06600	2 – 7
	39 – 44
	40 – 13
	41 – 38
	42 – 38
	46 – 16
95380–10600	30 – 54
95380–12600	26 – 45
95380–14700	37 – 7
95780–10300	27 – 4
95812–06025	31 – 11
95D95–06010	30 – 38
95D95–06016	31 – 22
97003–05012	53 – 12
	54 – 12
97303–05012	45 – 10
	52 – 8
97380–05025	39 – 10
97380–06018	40 – 21
	41 – 19
	42 – 19
97380–08030	39 – 37
97513–06525	20 – 25
97513–08545	22 – 27
97585–06510	26 – 23
97602–04306	29 – 7
97602–04308	29 – 11
97607–04208	5 – 35

PART NO. CODIGO Nº	REF. NO.
97780–50620	20 – 38
97780–60520	24 – 19
97885–06010	26 – 10
	26 – 13
97890–05016	40 – 4
	41 – 63
	42 – 73
97890–05025	40 – 18
	41 – 15
	42 – 15
97890–06018	41 – 47
	42 – 47
97890–06035	40 – 65
97980–05312	17 – 7
97980–06216	30 – 46
97985–04116	25 – 17
97985–06210	17 – 14
97985–06212	26 – 8
	26 – 16
97985–06216	27 – 2
97D95–06012	30 – 34
97D95–06020	23 – 35
	23 – 43
97D95–08016	20 – 45
97E75–06516	8 – 7
	8 – 9
97E75–06535	25 – 30
97E75–06540	31 – 17
97E75–08535	30 – 23
	31 – 4
97E75–08540	5 – 21
	8 – 1
	8 – 11
97E75–08560	31 – 3
97E75–08590	30 – 17
97E75–10535	30 – 4
97E75–10545	30 – 3
97E95–06510	26 – 6
97E95–06512	18 – 11
	20 – 9
	26 – 29
97E95–06514	15 – 16
97E95–06516	2 – 9
	19 – 7
	20 – 40
	55 – 9
	56 – 11
97E95–06520	3 – 42

PART NO. CODIGO Nº	REF. NO.
97E95–06520	18 – 2
	18 – 7
	19 – 2
	30 – 12
97E95–06525	3 – 27
	3 – 36
	26 – 4
97E95–06530	5 – 32
	5 – 37
	5 – 42
	58 – 4
97E95–06535	21 – 14
	25 – 8
97E95–06610	20 – 24
97E95–06616	20 – 27
	20 – 41
97E95–06620	8 – 27
97E95–06635	17 – 9
97E95–08516	20 – 16
97E95–08520	20 – 14
	32 – 73
	34 – 78
97E95–08525	32 – 40
	34 – 42
97E95–10645	33 – 5
	35 – 5
98507–04008	13 – 35
98580–04006	39 – 40
	40 – 32
98580–05008	40 – 51
98780–04015	20 – 11
98780–04016	3 – 17
	6 – 10
98780–05018	41 – 30
	42 – 32
98980–05010	46 – 10
98980–06020	46 – 15
99001–08600	32 – 16
	34 – 18
99002–03600	28 – 40
99530–08012	17 – 8
99530–10114	8 – 2
99530–14016	5 – 23
	5 – 28
	7 – 27
99590–10114	32 – 61
	34 – 63
9E450–04533	43 – 2

PART NO. CODIGO Nº	REF. NO.
9E450–04533	44 – 2